3-5. BUSS AMPL. PCB Ass'y

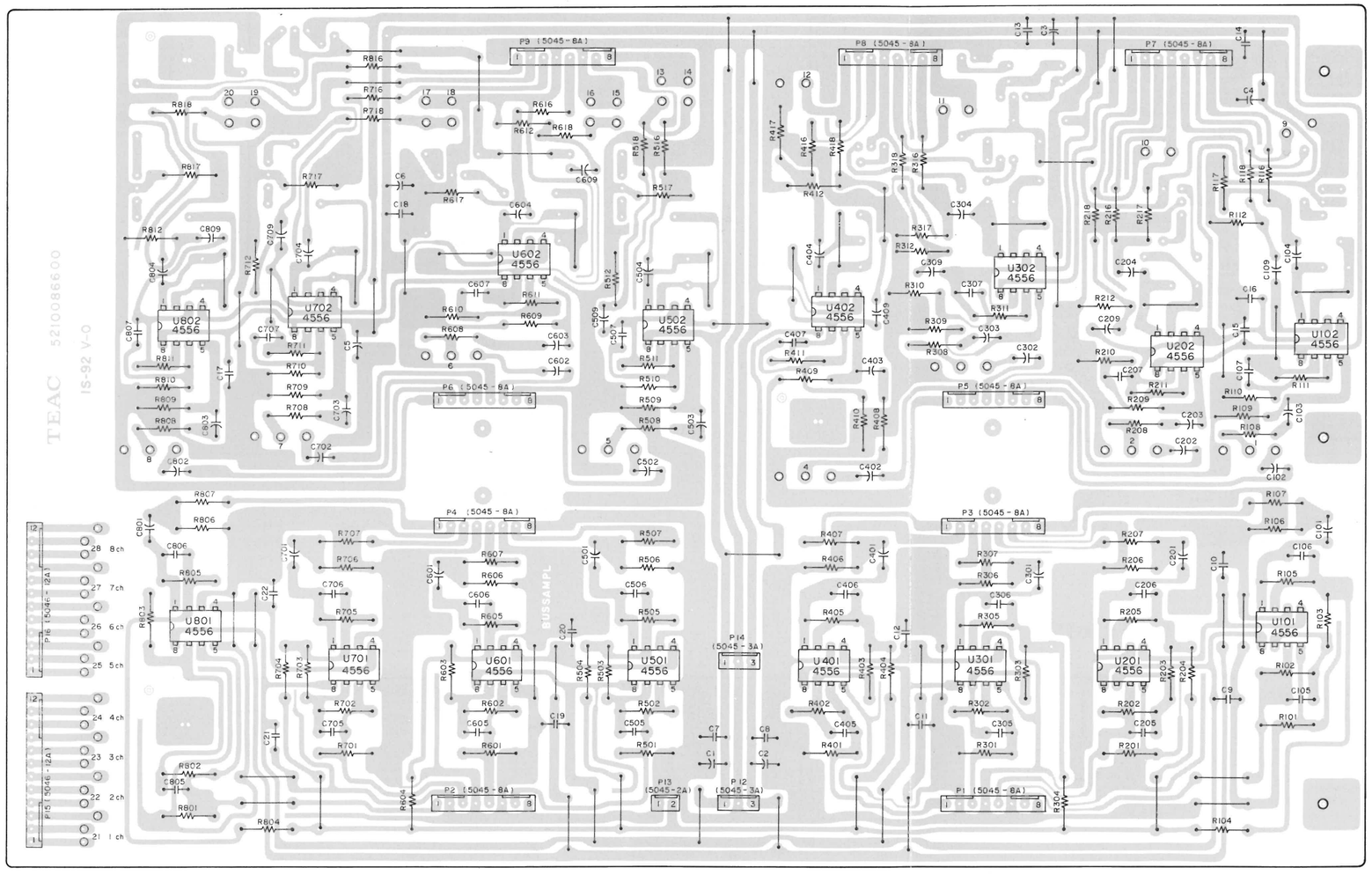

BUSS AMPL. PCB Ass'y

REF. NO.	PARTS NO.	DESCRIPTION
	*5200086610	PCB Ass'y (M-512)
	*5200086620	PCB Ass'y (M-520)
	5210086600	PCB
		IC'S
U101, U201	5220414400	NJM4556D
U301, U401	5220414400	NJM4556D
U501, U601	5220414400	NJM4556D
U701, U801	5220414400	NJM4556D
U102, U202	5220414400	NJM4556D
U302, U402	5220414400	NJM4556D
U502, U602	5220414400	NJM4556D
U702, U802	5220414400	NJM4556D
		CARBON RESISTORS
		All resistors are rated ±5% tolerance at 1/4W.
R101, R201	5181514000	22kΩ
R301, R401	5181514000	22kΩ
R501, R601	5181514000	22kΩ
R701, R801	5181514000	22kΩ
R102, R202	5181514000	22kΩ
R302, R402	5181514000	22kΩ
R502, R602	5181514000	22kΩ
R702, R802	5181514000	22kΩ
R103, R203	5181514000	22kΩ
R303, R403	5181514000	22kΩ
R503, R603	5181514000	22kΩ
R703, R803	5181514000	22kΩ
R104, R204	5181514000	22kΩ
R304, R404	5181514000	22kΩ
R504, R604	5181514000	22kΩ
R704, R804	5181514000	22kΩ
R105, R205	5181514000	22kΩ
R305, R405	5181514000	22kΩ
R505, R605	5181514000	22kΩ
R705, R805	5181514000	22kΩ
R106, R206	5181522000	47kΩ
R306, R406	5181522000	47kΩ
R506, R606	5181522000	47kΩ
R706, R806	5181522000	47kΩ
R107, R207	5181458000	100Ω
R307, R407	5181458000	100Ω
R507, R607	5181458000	100Ω
R707, R807	5181458000	100Ω
R108, R208	5181482000	1kΩ
R308, R408	5181482000	1kΩ
R508, R608	5181482000	1kΩ
R708, R808	5181482000	1kΩ
R109, R209	5181530000	100kΩ
R309, R409	5181530000	100kΩ
R509, R609	5181530000	100kΩ

REF. NO.	PARTS NO.	DESCRIPTION
R709, R809	5181530000	100kΩ
R110, R210	5181506000	10kΩ
R310, R410	5181506000	10kΩ
R510, R610	5181506000	10kΩ
R710, R810	5181506000	10kΩ
R111, R211	5181510000	15kΩ
R311, R411	5181510000	15kΩ
R511, R611	5181510000	15kΩ
R711, R811	5181510000	15kΩ
R112, R212	5181530000	100kΩ
R312, R412	5181530000	100kΩ
R512, R612	5181530000	100kΩ
R712, R812	5181530000	100kΩ
R116, R216	5181458000	100Ω
R316, R416	5181458000	100Ω
R516, R616	5181458000	100Ω
R716, R816	5181458000	100Ω
R117, R217	5181522000	47kΩ
R317, R417	5181522000	47kΩ
R517, R617	5181522000	47kΩ
R717, R817	5181522000	47kΩ
R118, R218	5181434000	10Ω
R318, R418	5181434000	10Ω
R518, R618	5181434000	10Ω
R718, R818	5181434000	10Ω

REF. NO.	PARTS NO.	DESCRIPTION		
CAPACITORS				
C1 ~ C6	5260165252	Elec.	47μF	25V
C7 ~ C22	5173433000	Ceramic	0.01μF	50V
C101, C201	5260163452	Elec.	22μF	25V
C301, C401	5260163452	Elec.	22μF	25V
C501, C601	5260163452	Elec.	22μF	25V
C701, C801	5260163452	Elec.	22μF	25V
C102, C202	5260162550	Elec.	10μF	16V
C302, C402	5260162550	Elec.	10μF	16V
C502, C602	5260162550	Elec.	10μF	16V
C702, C802	5260162550	Elec.	10μF	16V
C103, C203	5260162550	Elec.	10μF	16V
C303, C403	5260162550	Elec.	10μF	16V
C503, C603	5260162550	Elec.	10μF	16V
C703, C803	5260162550	Elec.	10μF	16V
C104, C204	5260163452	Elec.	22μF	25V
C304, C404	5260163452	Elec.	22μF	25V
C504, C604	5260163452	Elec.	22μF	25V
C704, C804	5260163452	Elec.	22μF	25V
C105, C205	5172208000	Ceramic	47pF	
C305, C405	5172208000	Ceramic	47pF	
C505, C605	5172208000	Ceramic	47pF	
C705, C805	5172208000	Ceramic	47pF	
C106, C206	5172204000	Ceramic	22pF	
C306, C406	5172204000	Ceramic	22pF	
C506, C606	5172204000	Ceramic	22pF	
C706, C806	5172204000	Ceramic	22pF	
C107, C207	5172211000	Ceramic	82pF	
C307, C407	5172211000	Ceramic	82pF	
C507, C607	5172211000	Ceramic	82pF	
C707, C807	5172211000	Ceramic	82pF	
C109, C209	5260163452	Elec.	22μF	25V
C309, C409	5260163452	Elec.	22μF	25V
C509, C609	5260163452	Elec.	22μF	25V
C709, C809	5260163452	Elec.	22μF	25V
CONNECTOR PLUGS				
P1 ~ P9	5122132000	8P (WHT)		
P12	5122127000	3P (WHT)		
P13	5122126000	2P (WHT)		
P14	5122127000	3P (WHT)		
P15, P16	5122155000	12P (WHT)		

3-6. INPUT AMPL.PCB (A ~ G) Ass'y

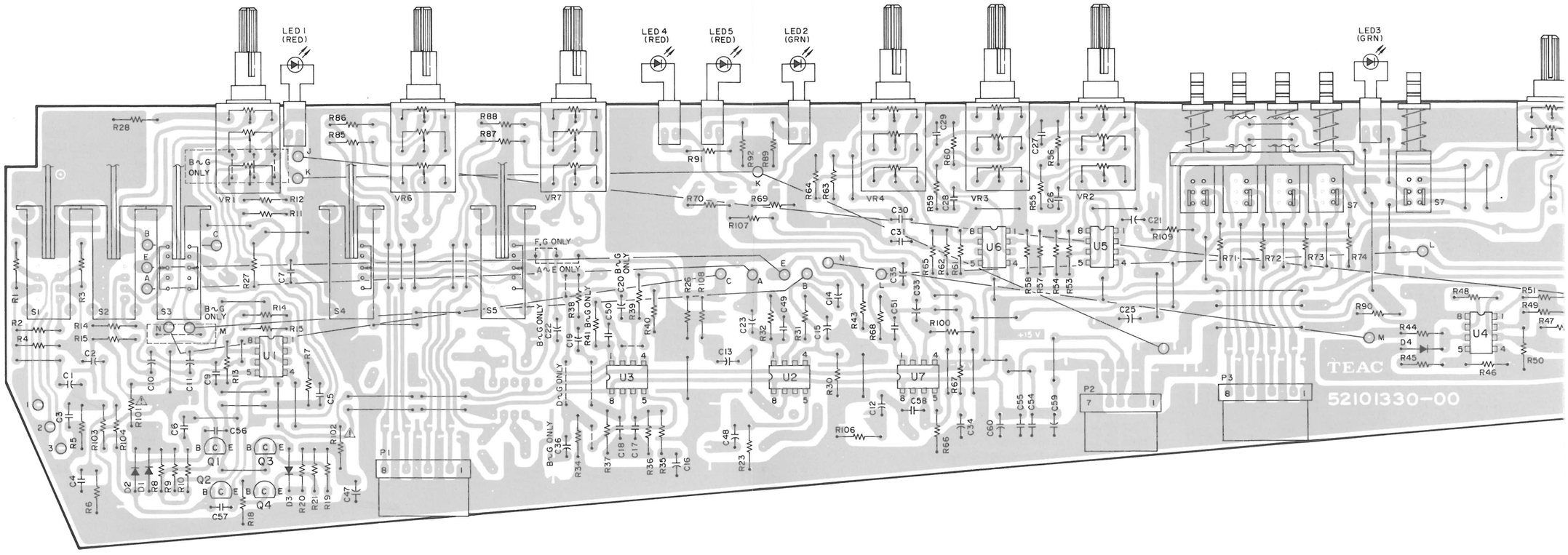

3-7. MOTHER B PCB Ass'y [M-512]

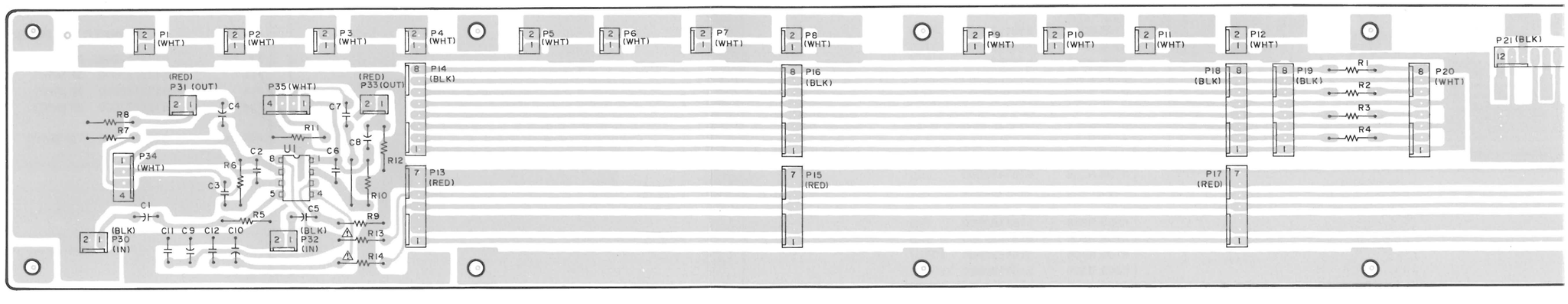

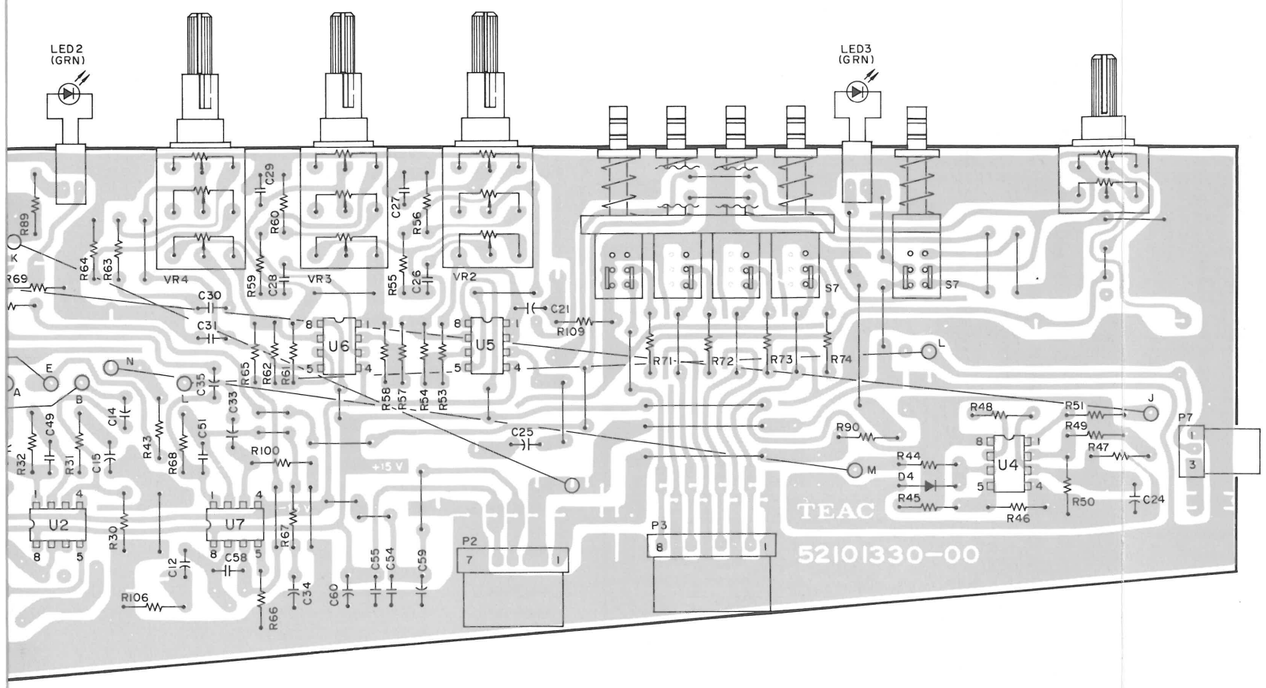

3-6-1. SW B PCB

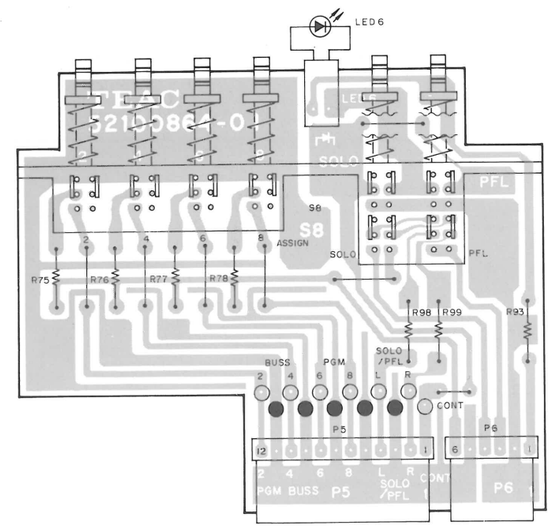

3-6-2. SW A PCB

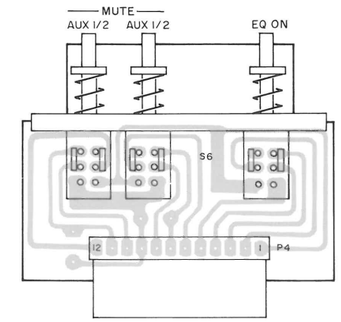

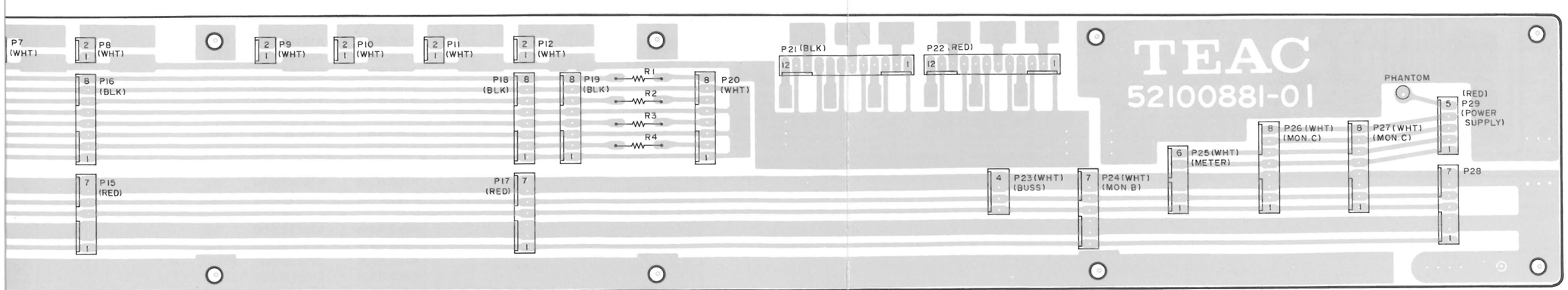

INPUT AMPL. PCB (A ~ G) ASS'Y (Included SW A PCB and SW B PCB.)

REF. NO.	PARTS NO.	DESCRIPTION
	*5200133000	PCB A Ass'y (Chan. 1, 2)
	*5200133010	PCB B Ass'y (Chan. 3)
	*5200133020	PCB C Ass'y (Chan. 4)
	*5200133030	PCB D Ass'y (M-512: Chan. 5 ~ 7) (M-520: Chan. 5 ~ 11, 13 ~ 15)
	*5200133040	PCB E Ass'y (M-512: Chan. 8) (M-520: Chan. 8, 12, 16)
	*5200133050	PCB F Ass'y (M-512: Chan. 9 ~ 11) (M-520: Chan. 17 ~ 19)
	*5200133060	PCB G Ass'y (M-512: Chan. 12) (M-520: Chan. 20)
	5210133000	PCB
		IC's
U1	5220407000	TL072CP
U2	5220414400	NJM4556D
U3	5220416600	NJM2041DD (All except A)
U4	6048650003	NJM2903D
U5, U6	5220407000	TL072CP
U7	5220414400	NJM4556D
		TRANSISTORS
Q1, Q2	5145119000	2SC1844F
Q3, Q4	5145151000	2SC1815GR
		DIODES
D1 ~ D4	5143118000	1S2473HJ
		CARBON RESISTORS
		All resistors are rated ±5% tolerance and 1/4 watt, unless otherwise noted.
R1	5181482000	1kΩ
R2	5181454000	68Ω
R3	5181482000	1kΩ
R4	5181491000	2.4kΩ
R5, 6	5181506000	10kΩ
R7	5241152200	47kΩ 1% Metal Film
R8,R9	5241149800	4.7kΩ 1% Metal Film
R10	5181458000	100Ω
R11	5181448000	39Ω
R12	5181546000	470kΩ
R13	5241152200	47kΩ 1% Metal Film
R14, R15	5241150600	10kΩ 1% Metal Film
R16, R17	5181530000	100kΩ
R18	5181500000	5.6kΩ
R19	5241148600	1.5kΩ 1% Metal Film
R20	5181486000	1.5kΩ
R21	5241148600	1.5kΩ 1% Metal Film
R23	5181522000	47kΩ
R26	5181522000	47kΩ
R27	5181530000	100kΩ

REF. NO.	PARTS NO.	DESCRIPTION
R28	5181462000	150Ω
R30	5181530000	100kΩ
R31	5181506000	10kΩ
R32	5181510000	15kΩ
R34	5181522000	47kΩ (B, C)
R35	5181498000	4.7kΩ (B, C)
R36	5181522000	47kΩ (B, C)
R37	5181548000	560kΩ (B, C)
R38	5181482000	1kΩ (B, C)
R39	5181530000	100kΩ (All except A)
R40	5181482000	1kΩ (B, C)
R41	5181506000	10kΩ (B, C)
R43	5181458000	100Ω
R44	5181530000	100kΩ
R45	5181515000	24kΩ
R46	5181516000	27kΩ
R47	5181530000	100kΩ
R48	5181458000	100Ω
R49	5181516000	27kΩ
R50	5181522000	47kΩ
R51	5181476000	560Ω
R52	5181538000	220kΩ
R53 ~ R58	5181506000	10kΩ
R59, R60	5181488000	1.8kΩ
R61, R62	5181506000	10kΩ
R63, R64	5181513000	20kΩ
R65 ~ R67	5181506000	10kΩ
R68	5181510000	15kΩ
R69	5181522000	47kΩ
R70	5181458000	100Ω
R71 ~ R74	5181514000	22kΩ
R85 ~ R88	5181514000	22kΩ
R89 ~ R92	5181476000	560Ω
R100	5181530000	100kΩ
R101, R102	⚠ 5183566000	33Ω Nonflammable
R103, R104	5181434000	10Ω
R105 ~ R106	5181522000	47kΩ
R107, R108	5181434000	10Ω
R109	5181522000	47kΩ
VR9	5240030620	10kΩ 1/8W

REF. NO.	PARTS NO.	DESCRIPTION			
		CAPACITORS			
C1, C2	5260223210	Elec.	22μF	50V	
C3, C4	5054744000	Dip Mica	100pF		
C5	5170006000	Dip Mica	68pF		
C6	5170352000	Mylar	0.001μF		
C7	5260072700	Elec. (B.P.)	470μF	16V	
C9	5170006000	Dip, Mica	68pF		
C10, C11	5260165252	Elec.	47μF	25V	
C12, C13	5260163452	Elec.	22μF	25V	
C14	5260162550	Elec.	10μF	16V	
C15	5260165252	Elec.	47μF	25V	
C16	5260165952	Elec.	100μF	10V	(B, C)
C17	5170356000	Mylar	0.0015μF		(B, C)
C18	5170368000	Mylar	0.0047μF		(B, C)
C19	5260163452	Elec.	22μF	25V	(B, C)
C20	5260162550	Elec.	10μF	16V	
			(All except A)		
C21	5260163452	Elec.	22μF	25V	
C22	5260163452	Elec.	22μF	25V	
			(All except A)		
C23	5260163452	Elec.	22μF	25V	
C24	5260160750	Elec.	1μF	50V	
C25	5260162550	Elec.	10μF	16V	
C26	5171872000	Mylar	0.047μF		
C27	5171862000	Mylar	0.018μF		
C28	5171866000	Mylar	0.027μF		
C29	5171856000	Mylar	0.01μF		
C30	5172827000	Polist.	910pF		
C31	5172816000	Polist.	330pF		
C33, C34	5260162550	Elec.	10μF	16V	
C35	5260163452	Elec.	22μF	25V	
C36	5260162550	Elec.	10μF	16V	(B, C)
C46, C47	5260166052	Elec.	100μF	16V	
C48	5260162550	Elec.	10μF	16V	
C49	5054758000	Dip Mica	82pF		
C50	5054758000	Dip Mica	82pF		(B, C)
C51	5054758000	Dip Mica	82pF		
C54, C55	5054204000	Ceramic	0.01μF	50V	
C56 ~ C58	5054742000	Dip Mica	47pF		
C59, C60	5260165252	Elec.	47μF	25V	
C61	5054204000	Ceramic	0.01μF	50V	
		SWITCHES			
S1, S2	5132037000	Lever, SLR522			
S3 ~ S5	5132036000	Lever, SLR523			
S7	5300029800	Push, SUJ50			
		VARIABLE RESISTORS			
VR1	5283504900	5kΩ (RD) + 10kΩ (RD) + 10kΩ (A) [Chan. 1, 2]			
	5282706700	5kΩ (RD) + 10kΩ (A) [Chan. 3 ~ 20]			
VR2 ~ VR4	5283505000	10kΩ (B) + 100kΩ (E) × 2			
VR6, VR7	5282707300	20kΩ (A) × 2			
VR8	5282408600	5kΩ (A, C)			

REF. NO.	PARTS NO.	DESCRIPTION
		LED's
D1	5225006900	PR3432S (RED)
D2	5224015800	PG3432SY (GRN)
D3	5224015800	PR3432SY (GRN)
D4	5225006900	PG3432S (RED)
D5	5225006900	PR3432S (RED)
		CONNECTORS
P1	5122151000	Plug 8P (WHT)
P2	5122150000	Plug 7P (WHT)
P3	5122151000	Plug 8P (WHT)
P7	5122146000	Plug 3P (WHT)
	5122373000	Socket 2P (WHT)
		Sub PCBs
	5210086301	PCB, SW (A)
S6	5300029400	Push Switch, SUJ-30
P4	5122155000	Connector Plug, 12P (WHT)
	5210086401	PCB, SW (B)
R75 ~ R80	5181514000	Carbon Resistor, 22kΩ, 1/4W 5%
R93	5181476000	Carbon Resistor, 560Ω, 1/4W 5%
R98, R99	5181514000	Carbon Resistor, 22kΩ, 1/4W 5%
S8	5300029700	Switch, Push, SUJ60
D6	5225006900	LED PR3432S
P5	5122155000	Connector Plug 12P (WHT)
P6	5122149000	Connector Plug 6P (WHT)
	5122373000	Connector socket, 2P

Components Mounted Chart

○ : Mounted
– : Not Mounted

PCB Ass'y		A	B	C	D	E	F	G
CHANNEL	M-512	1, 2	3	4	5 ~ 7	8	9 ~ 11	12
	M-520	1, 2	3	A	5 ~ 11, 13 ~ 15	8, 12, 16	17 ~ 19	20
REF. NO.	U3	–	○	○	○	○	○	○
	R34	–	○	○	–	–	–	–
	R35	–	○	○	–	–	–	–
	R36	–	○	○	–	–	–	–
	R37	–	○	○	–	–	–	–
	R38	–	○	○	–	–	–	–
	R39	–	○	○	○	○	○	○
	R40	–	○	○	–	–	–	–
	R41	–	○	○	0Ω	0Ω	0Ω	0Ω
	C16	–	○	○	–	–	–	–
	C17	–	○	○	–	–	–	–
	C18	–	○	○	–	–	–	–
	C19	–	○	○	–	–	–	–
	C20	–	○	○	○	○	○	○
	C22	–	○	○	○	○	○	○
	C36	–	○	○	0Ω	0Ω	0Ω	0Ω
	C50	–	○	○	–	–	–	–

MOTHER B PCB Ass'y [M-512]

REF. NO.	PARTS NO.	DESCRIPTION	
	* 5200088102	PCB Ass'y	
	5210088101	PCB	
		IC	
U1	5220416600	NJM2041DD	
		CARBON RESISTORS All resistors are rated ±5% tolerance at 1/4W.	
R1 ~ R4	5181514000	22kΩ	
R5	5181538000	220kΩ	
R6	5181554000	1MΩ	
R7	5181458000	100Ω	
R8	5181522000	47kΩ	
R9	5181538000	220kΩ	
R10	5181554000	1MΩ	
R11	5181458000	100Ω	
R12	5181522000	47kΩ	
R13,R14	⚠5183566000	33Ω	Nonflammable

REF. NO.	PARTS NO.	DESCRIPTION			
		CAPACITORS			
C1	5260162550	Elec.	10μF	16V	
C2	5172212000	Ceramic	100pF		
C3	5260069650	Elec.	47μF	16V	(B.P.)
C4	5260163452	Elec.	22μF	25V	
C5	5260162550	Elec.	10μF	16V	
C6	5172212000	Ceramic	100pF		
C7	5260069650	Elec.	47μF	16V	(B.P.)
C8	5260163452	Elec.	22μF	25V	
C9, C10	5260165252	Elec.	47μF	25V	
C11, C12	5173433000	Ceramic	0.01μF	50V	
		CONNECTOR PLUGS			
P1 ~ P12	5122126000	2P (WHT)			
P13	5122304000	7P (RED)			
P14	5122189000	8P (BLK)			
P15	5122304000	7P (RED)			
P16	5122189000	8P (BLK)			
P17	5122304000	7P (RED)			
P18, P19	5122189000	8P (BLK)			
P20	5122132000	8P (WHT)			
P21	5122193000	12P (BLK)			
P22	5122309000	12P (RED)			
P23	5122128000	4P (WHT)			
P24	5122131000	7P (BLK)			
P25	5122130000	6P (WHT)			
P26, P27	5122189000	8P (BLK)			
P28	5122304000	7P (RED)			
P29	5122302000	5P (RED)			
P30	5122183000	2P (BLK)			
P31	5122299000	2P (RED)			
P32	5122183000	2P (BLK)			
P33	5122299000	2P (RED)			
P34, P35	5122128000	4P (WHT)			

3-8. MONITOR AMPL. B PCB Ass'y

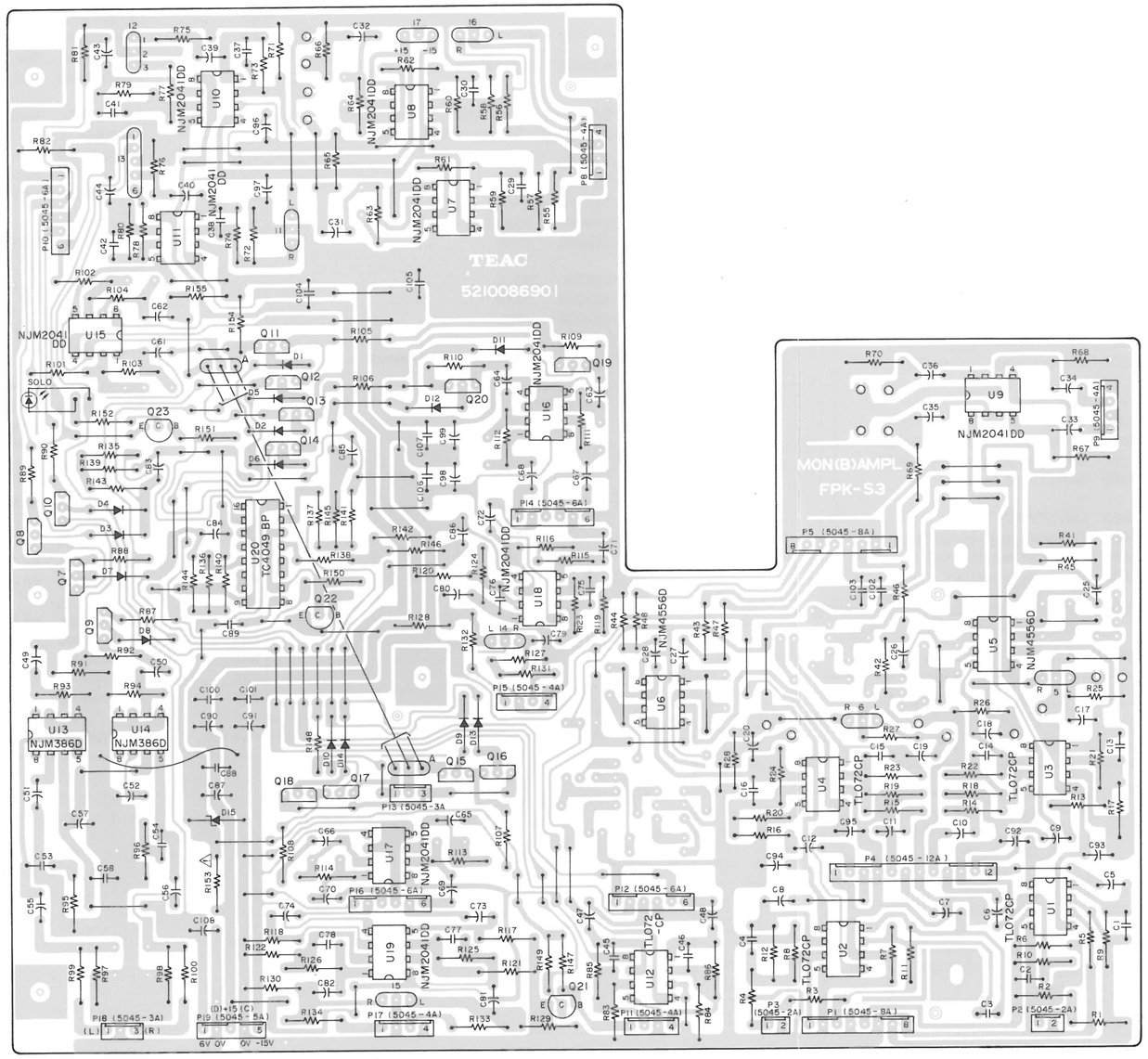

MONITOR AMPL. B PCB Ass'y

REF. NO.	PARTS NO.	DESCRIPTION
	*5200086910	PCB Ass'y (M-512)
	*5200086920	PCB Ass'y (M-520)
	5210086901	PCB
		IC'S
U1 ~ U4	5220407000	TL072CP
U5, U6	5220414400	NJM4556D
U7 ~ U11	5220416600	NJM2041DD
U12	5220407000	TL072CP
U13, U14	6048649000	NJM386D
U15 ~ 17	5220416600	NJM2041DD
U18, U19	5220416600	NJM2041DD
U20	5220020000	TC4049BP
		TRANSISTORS
Q7 ~ Q20	5232007000	2SK-304 (EF)
Q21 ~ Q23	5145151000	2SC-1815GR
		DIODES
D1 ~ D14	5143118000	1S2473HJ
D15	5042281000	WZ120, Zener
		RESISTORS
		All resistors are rated ±5% tolerance 1/4 watt and of carbon type unless otherwise noted.
R1 ~ R4	5181514000	22kΩ
R5 ~ R8	5181538000	220kΩ
R9 ~ R12	5181514000	22kΩ
R13 ~ R16	5181522000	47kΩ
R17 ~ R24	5181532000	120kΩ
R25 ~ R28	5181522000	47kΩ
R41 ~ R44	5181522000	47kΩ
R45 ~ R48	5181458000	100Ω
R55, R56	5181514000	22kΩ
R57, R58	5181538000	220kΩ
R59 ~ R64	5181514000	22kΩ
R65, R66	5181522000	47kΩ
R67, R68	5181530000	100kΩ
R69, R70	5181522000	47kΩ
R71, R72	5181538000	220kΩ
R73, R74	5181514000	22kΩ
R75 ~ R78	5181522000	47kΩ
R79, R80	5181514000	22kΩ
R81, R82	5181522000	47kΩ
R83, R84	5181538000	220kΩ
R85, R86	5181502000	6.8kΩ
R87 ~ R90	5181482000	1kΩ
R91, R92	5181522000	47kΩ
R93, R94	5181530000	100kΩ
R95, R96	5181434000	10Ω

REF. NO.	PARTS NO.	DESCRIPTION		
R97, R98	5181482000	1kΩ		
R99, R100	5181410000	1Ω		
R101, R102	5181524000	56kΩ		
R103, R104	5181514000	22kΩ		
R105, R106	5181506000	10kΩ		
R107, R108	5181518000	33kΩ		
R109, R110	5181542000	330kΩ		
R111, R112	5181528000	82kΩ		
R113, R114	5181540000	270kΩ		
R115～R118	5181530000	100kΩ		
R119～R122	5181506000	10kΩ		
R123～R126	5181510000	15kΩ		
R127～R130	5181522000	47kΩ		
R131～R134	5181458000	100Ω		
R135～R138	5181526000	68kΩ		
R139～R148	5181530000	100kΩ		
R149	5181494000	3.3kΩ		
R150	5181506000	10kΩ		
R151	5181516000	27kΩ		
R152	5180066000	220Ω	1/2W	
R153	⚠ 5183590000	330Ω	Nonflammable	
R154, R155	5181522000	47kΩ		

CAPACITORS

C1～C4	5054382000	Dip Mica	22pF	
C5～C8	5260163452	Elec.	22μF	25V
C9～C12	5260162550	Elec.	10μF	16V
C13～C16	5054740000	Dip Mica	10pF	
C17～C20	5260163452	Elec.	22μF	25V
C25～C28	5260163452	Elec.	22μF	25V
C29, C30	5054382000	Dip Mica	22pF	
C31, C32	5260163452	Elec.	22μF	25V
C33, C34	5260162550	Elec.	10μF	16V
C35, C36	5260163452	Elec.	22μF	25V
C37, C38	5054382000	Dip Mica	22pF	
C39, C40	5260163452	Elec.	22μF	25V
C41, C42	5054382000	Dip Mica	22pF	
C43, C44	5260163452	Elec.	22μF	25V
C45, C46	5054382000	Dip Mica	22pF	
C47, C48	5260163452	Elec.	22μF	25V
C49～C52	5260162550	Elec.	10μF	16V
C53, C54	5054738500	Mylar	0.047μF	
C55, C56	5173079000	Elec.	1000μF	6.3V
C57	5173080000	Elec.	1000μF	10V
C58	5054204000	Ceramic	0.01μF	50V
C61, C62	5260163452	Elec.	22μF	25V
C63～C66	5260162550	Elec.	10μF	16V
C67～C70	5260163452	Elec.	22μF	25V
C71～C74	5260162550	Elec.	10μF	16V
C75～C78	5054758000	Dip Mica	82pF	
C79～C82	5260163452	Dip Mica	22pF	25V
C83	5260160750	Elec.	1μF	16V
C84	5260160750	Elec.	1μF	50V
C85, C86	5260160750	Elec.	1μF	50V

REF. NO.	PARTS NO.	DESCRIPTION		
C87	5260165252	Elec.	47μF	25V
C88, C89	5054204000	Ceramic	0.01μF	50V
C90～C99	5260165252	Elec.	47μF	25V
C100～C107	5054204000	Ceramic	0.01μF	50V
C108	5260165052	Elec.	47μF	10V

CONNECTOR PLUGS

P1	5122132000	8P (WHT)
P2, P3	5122126000	2P (WHT)
P4	5122136000	12P (WHT)
P5	5122132000	8P (WHT)
P8, P9	5122128000	4P (WHT)
P10	5122130000	6P (WHT)
P11	5122128000	4P (WHT)
P12	5122130000	6P (WHT)
P13	5122127000	3P (WHT)
P14	5122130000	6P (WHT)
P15	5122128000	4P (WHT)
P16	5122130000	6P (WHT)
P17	5122128000	4P (WHT)
P18	5122127000	3P (WHT)
P19	5122129000	5P (WHT)

3-9. MONITOR A PCB (1, 2) Ass'y [M-520]

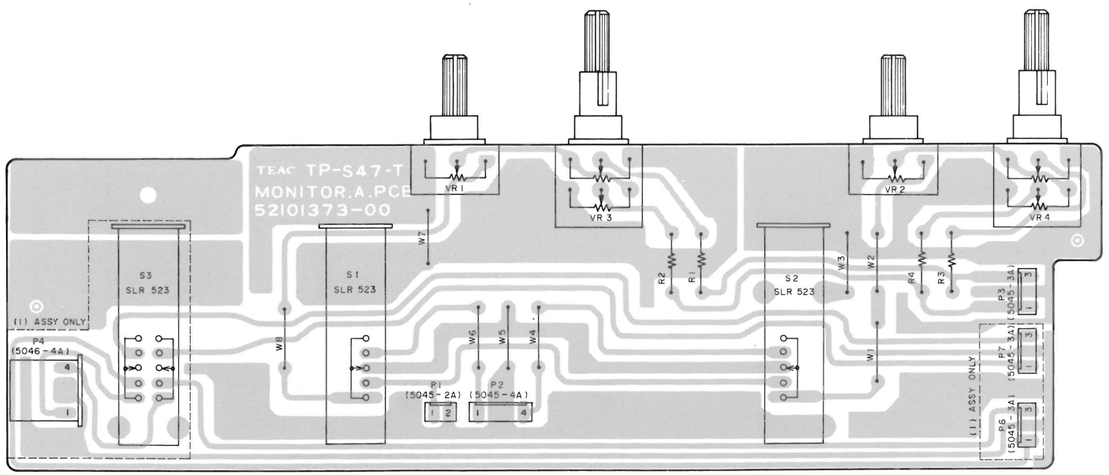

MONITOR A PCB (1, 2) Ass'y [M-520]

REF. NO.	PARTS NO.	DESCRIPTION
	*5200137300	PCB 1 Ass'y
	*5200137310	PCB 2 Ass'y
	5210137300	PCB
R1 ~ R4	5181514000	Carbon Resistor, 22 kΩ 1/4W 5%
S1, S2	5132036000	Lever Switch, SLR523
S3	5132036000	Lever Switch, SLR523 [1 only]
VR1, VR2	5282011500	Variable Resistor, 10 kΩ (A)
VR3, VR4	5282408600	Variable Resistor, 5 kΩ (A, C)
P1	5122126000	Connector Plug 2P (WHT)
P2	5122185000	Connector Plug 4P (BLK)
P3	5122127000	Connector Plug 3P (WHT)
P4	5122147000	Connector Plug 4P (WHT) [1 only]
P6	5336107300	Connector Plug 3P (YEL) [1 only]
P7	5122184000	Connector Plug 3P (BLK) [1 only]

3-10. LED B PCB Ass'y

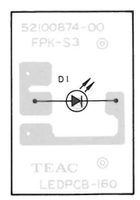

LED B PCB Ass'y

REF. NO.	PARTS NO.	DESCRIPTION
	*5200087400	PCB Ass'y
	5210087400	PCB
D1	5225008800	LED Ass'y (RED)

3-11. LED PCB Ass'y [M-520]

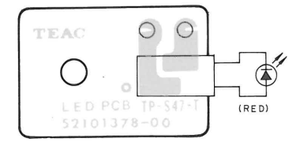

LED PCB Ass'y [M-520]

REF. NO.	PARTS NO.	DESCRIPTION
	*5200137800	PCB Ass'y
	5210137800	PCB
D12	5225005400	LED, SLP-135B (RED)
	5122373000	Connector Socket 2P

3-12. POWER SW PCB Ass'y [M-520]

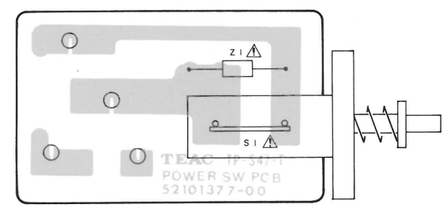

POWER SW PCB Ass'y [M-520]

REF. NO.	PARTS NO.	DESCRIPTION
	*5200137700	PCB Ass'y [J]
	*5200137710	PCB Ass'y [U]
	*5200137720	PCB Ass'y [C]
	*5200137730	PCB Ass'y [GE]
	*5200137740	PCB Ass'y [E, UK, A]
	5210137700	PCB
S1	⚠ 5300030800	Switch, Power
Z1	⚠ 5052905000	Spark Killer 0.01μF + 20Ω/300V [J]
	⚠ 5052910000	Spark Killer 0.033μF + 120Ω/250V [U]
	⚠ 5292002600	Spark Killer 0.033μF + 120Ω/250V [C]
	⚠ 5292002500	Spark Killer 0.01μF + 300Ω/300V [GE]
	⚠ 5267702500	Spark Killer 0.0047μF/250V [E, UK, A]

3-13. DIODE PCB Ass'y [M-520]

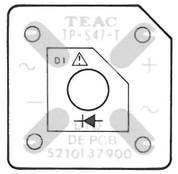

DIODE PCB Ass'y [M-520]

REF. NO.	PARTS NO.	DESCRIPTION
	*5200137900	PCB Ass'y
	5210137900	PCB
D1, D4	⚠ 5143147000	Diode KBPC802

3-14. POWER SW PCB Ass'y [M-512]

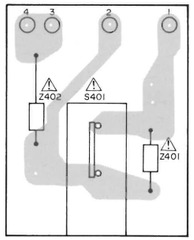

POWER SW PCB Ass'y [M-512]

REF. NO.	PARTS NO.	DESCRIPTION
	*5200127000	PCB Ass'y [J]
	*5200127010	PCB Ass'y [U]
	*5200127020	PCB Ass'y [C]
	*5200127030	PCB Ass'y [GE]
	*5200127041	PCB Ass'y [E, UK, A]
	5210073201	PCB
S401	⚠ 5300030800	Switch, Push
Z401	⚠ 5052907000	Spark Killer 0.01μF + 300Ω/300V [J]
	⚠ 5052910000	Spark Killer 0.033μF + 120Ω/125V [U]
	⚠ 5292002600	Spark Killer 0.033μF + 120Ω/125V [C]
	⚠ 5292002500	Spark Killer 0.01μF + 300Ω/300V [GE]
	⚠ 5267702500	Spark Killer 0.0047μF/250V [E, UK, A]
Z402	⚠ 5267702600	Spark killer 0.047μF/250V [E, UK, A]

3-15. MONITOR AMPL. A PCB Ass'y [M-512]

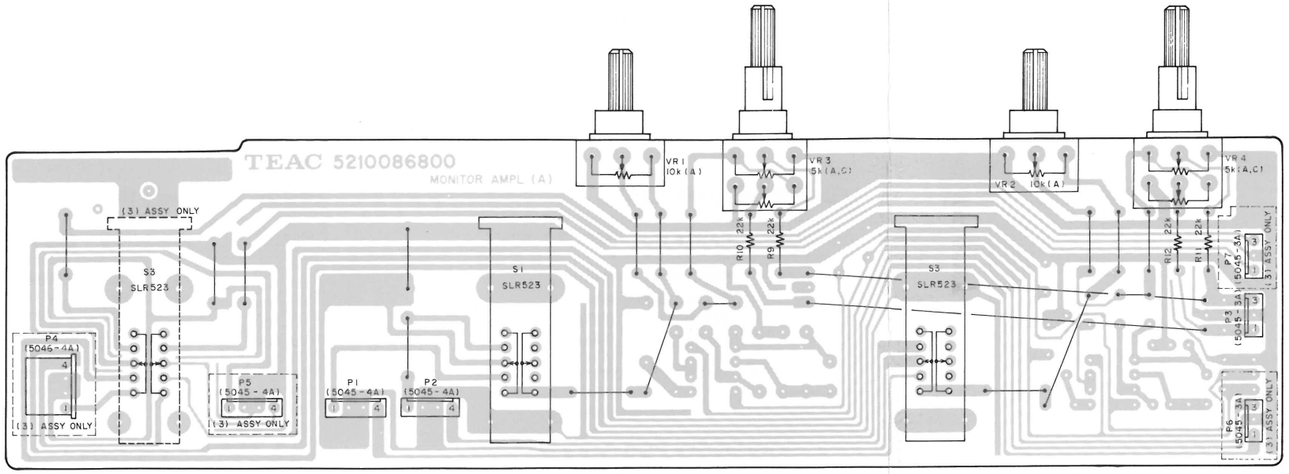

3-16. TALKBACK PCB Ass'y

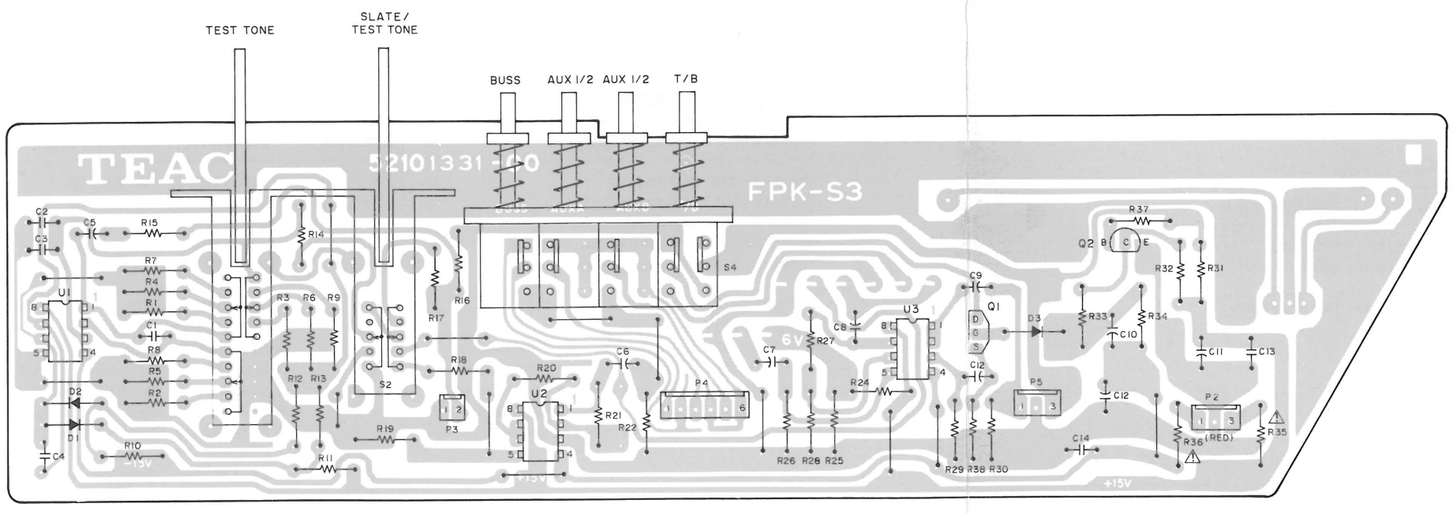

MONITOR AMPL. A PCB ASS'Y [M-512]

REF. NO.	PARTS NO.	DESCRIPTION
	* 5200086820	PCB Ass'y (3)
	* 5200086830	PCB Ass'y (4)
	5210086800	PCB
	CARBON RESISTORS	
R9～R12	5181514000	22kΩ 1/4W 5%
	CONNECTOR PLUGS	
P1	5122128000	4P (WHT)
P2	5122185000	4P (BLK)
P3	5122127000	3P (WHT)
P4	5122147000	4P (WHT) [3 only]
P5	5122128000	4P (WHT) [3 only]
P6	5336107300	3P (YEL) [3 only]
P7	5122184000	3P (BLK) [3 only]
	LEVER SWITCHES	
S1, S2	5132036000	SLR523
S3	5132036000	SLR523 [3 only]
	VARIABLE RESISTORS	
VR1, VR2	5282011500	10 kΩ (A)
VR3, VR4	5282408600	5 kΩ (A, C)

TALKBACK PCB Ass'y

REF. NO.	PARTS NO.	DESCRIPTION
	*5200133100	PCB Ass'y
	5210133100	PCB
	IC'S	
U1 ~ U3	5220406600	μPC4558C
	TRANSISTORS	
Q1	5232007000	2SK-304 (EF)
Q2	5145151000	2SC-1815 (GR)
	DIODES	
D1 ~ D3	5143118000	1S2473HJ
	CARBON RESISTORS	
	All resistors are rated ±5% tolerance at 1/4W.	
R1 ~ R3	5181544000	390kΩ
R4 ~ R6	5181510000	15kΩ
R7 ~ R9	5181486000	1.5kΩ
R10, R11	5181492000	2.7kΩ
R12, R13	5181482000	1kΩ
R14	5181502000	6.8kΩ
R15	5181501000	6.2kΩ
R16	5181474000	470Ω
R17	5181538000	220kΩ
R18	5181482000	1kΩ
R19	5181530000	100kΩ
R20	5181510000	15kΩ
R21, R22	5181522000	47kΩ
R24	5181504000	8.2kΩ
R25	5181500000	5.6kΩ
R26	5181522000	47kΩ
R27	5181530000	100kΩ
R28	5181482000	1kΩ
R29, R30	5181522000	47kΩ
R31	5181506000	10kΩ
R32	5181514000	22kΩ
R33	5181530000	100kΩ
R34	5181536000	180kΩ
R35, R36	⚠ 5183570000	47Ω Nonflammable
R37	5181530000	100kΩ
R38	5181522000	47kΩ

REF. NO.	PARTS NO.	DESCRIPTION	
	CAPACITORS		
C1, C2	5171856000	Mylar 0.01μF	
C3	5170352000	Mylar 0.001μF	
C4	5171856000	Mylar 0.01μF	
C5, C6	5260163452	Elec. 22μF	25V
C7	5260162550	Elec. 10μF	16V
C8, C9	5260163452	Elec. 22μF	25V
C10	5260160750	Elec. 1μF	50V
C11, C12	5260166052	Elec. 100μF	16V
C13, C14	5054204000	Ceramic 0.01μF	50V
C15	5260162550	Elec. 10μF	16V
	VARIABLE RESISTORS		
VR1, VR2	5282011600	Semi-fixed 10kΩ (A)	
	SWITCHES		
S1	5132040000	Lever, SLR543	
S2	5132036000	Lever, SLR523	
S3	5300032100	Push, 4-gang	
	CONNECTOR PLUGS		
P2	5122300000	3P (RED)	
P3	5122126000	2P (WHT)	
P4	5122130000	6P (WHT)	
P5	5122184000	3P (BLK)	
	MISCELLANEOUS		
M1	6055017000	MIC, EM10PB	

3-17. METER AMPL. PCB Ass'y

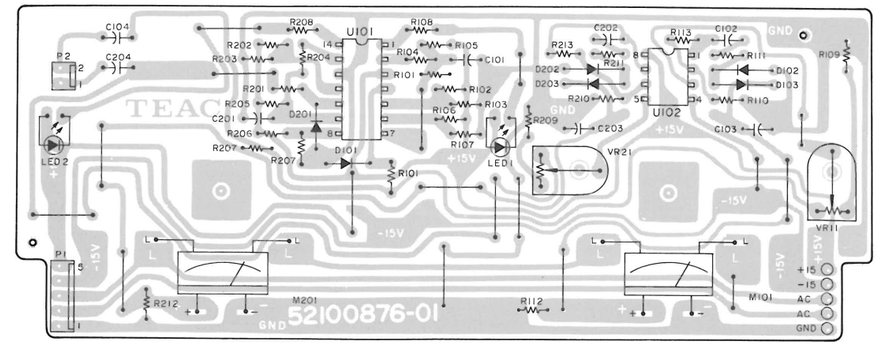

METER AMPL. PCB Ass'y

REF. NO.	PARTS NO.	DESCRIPTION
	*5200087602	PCB Ass'y
	5210087601	PCB
	IC'S	
U101	5220416900	LM339N
U102	5220406600	μPC4558C
	DIODES	
D101	5042517000	IS2473VE
D102, D103	5224015400	IK60
D201	5042517000	IS2473VE
D202, D203	5224015400	IK60
	CARBON RESISTERS	
	All resistors are rated ±5% tolerance at 1/4W.	
R101	5240173000	100kΩ
R102	5240173400	150kΩ
R103	5240171100	16kΩ
R104	5240165800	100Ω
R105	5240173000	100kΩ
R106	5240171600	27kΩ
R107	5240172200	47kΩ
R108	5240168600	1.5kΩ
R109	5240170600	10kΩ
R110	5240171200	18kΩ
R111, R112	5240168800	1.8kΩ
R113	5240173000	100kΩ
R201	5240173000	100kΩ
R202	5240173400	150kΩ
R203	5240171100	16kΩ

REF. NO.	PARTS NO.	DESCRIPTION	
R204	5240165800	100Ω	
R205	5240173000	100kΩ	
R206	5240171600	27kΩ	
R207	5240172200	47kΩ	
R208	5240168600	1.5kΩ	
R209	5240170600	10kΩ	
R210	5240171200	18kΩ	
R211, R212	5240168800	1.8kΩ	
R213	5240173000	100kΩ	
	CAPACITORS		
C101	5260160750	Elec. 1μF	50V
C102	5260163452	Elec. 22μF	25V
C103	5260162050	Elec. 4.7μF	35V
C104	5260162550	Elec. 10μF	16V
C201	5260160750	Elec. 1μF	50V
C202	5260163452	Elec. 22μF	25V
C203	5260162050	Elec. 4.7μF	35V
C204	5260162550	Elec. 10μF	16V
	VARIABLE RESISTORS		
VR11	5280003502	Semi-fixed 10kΩ (B)	
VR21	5280003502	Semi-fixed 10kΩ (B)	
	MISCELLANEOUS		
M101, M201	5296006101	VU Meter	
D1, D2	5225006900	LED, PR3432S	
	5800385100	LED Spacer	
P1	6052379005	Connector Plug, 5P (WHT)	
P2	6052379002	Connector Plug, 2P (WHT)	

3-18. MOTHER A PCB Ass'y [M-512]

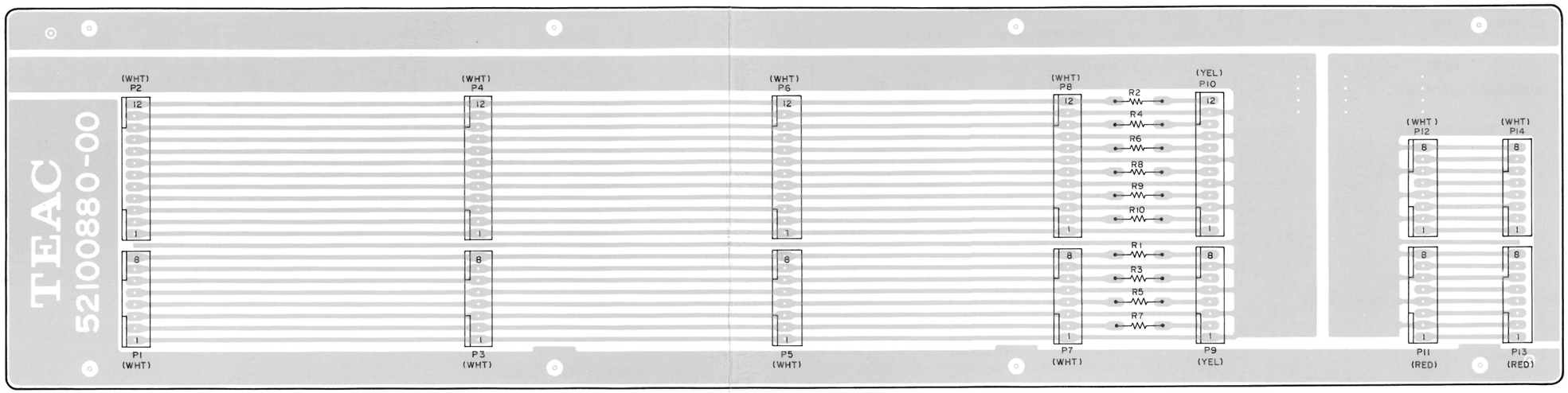

3-19. POWER SUPPLY PCB Ass'y [M-512]

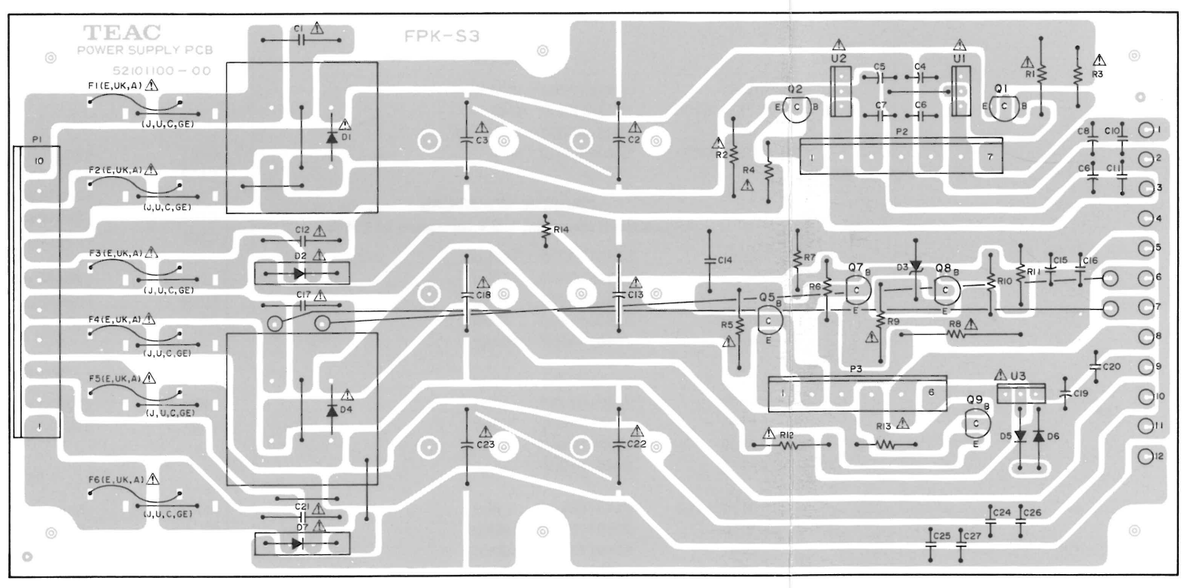

MOTHER A PCB Ass'y [M-512]

REF. NO.	PARTS NO.	DESCRIPTION
	* 5200088000	PCB Ass'y
	5210088000	PCB
	CARBON RESISTORS	
	All resistors are rated ±5%, tolerance at 1/4W.	
R1 ~ R10	5181514000	22kΩ
	CONNECTOR PLUGS	
P1	5122132000	8P (WHT)
P2	5122136000	12P (WHT)
P3	5122132000	8P (WHT)
P4	5122136000	12P (WHT)
P5	5122132000	8P (WHT)
P6	5122136000	12P (WHT)
P7	5122132000	8P (WHT)
P8	5122136000	12P (WHT)
P9	5336107800	8P (YEL)
P10	5336108200	12P (YEL)
P11	5122305000	8P (RED)
P12	5122132000	8P (WHT)
P13	5122305000	8P (RED)
P14	5122132000	8P (WHT)
P15	5122128000	4P (WHT)

POWER SUPPLY PCB Ass'y [M-512]

REF. NO.	PARTS NO.	DESCRIPTION
	*5200110001	PCB Ass'y [J, U, C, GE]
	*5200110011	PCB Ass'y [E.UK, A]
	5210110000	PCB
	IC'S	
U1	⚠ 5220415600	7815
U2	⚠ 5220412400	7915
U3	⚠ 5220405100	78M05
	TRANSISTORS	
Q1	5230014000	2SA-1020 (Y)
Q2	5230773800	2SC-2655 (Y)
Q5	5230773800	2SC-2655 (Y)
Q7, Q8	5230773800	2SC-2655 (Y)
Q9	5230014000	2SA-1020 (Y)
	DIODES	
D1	⚠ 5228007200	D4BB20
D2	⚠ 5228006600	KBP604 G1
D3	⚠ 5224545501	RD24EEB3, Zener
D4	⚠ 5228007200	D4BB20
D5, D6	5143211800	1S2473HJ
D7	⚠ 5228006600	KBP604 G1
	CARBON RESISTORS	
	All resistors are roted ±5% tolerance, 1/4watt and of carbon type unless otherwise noted.	
R1, R2	⚠ 5184247000	82Ω Nonflammable
R3, R4	⚠ 5185191000	0.33Ω 2W Metal Film
R5	⚠ 5182042000	6.8kΩ Nonflammable
R6	5181486000	1.5kΩ
R7	5181522000	47kΩ
R8	⚠ 5052810000	10Ω 2W Metal Film
R9	⚠ 5180094000	3.3kΩ 1/2W
R10	5181498000	4.7kΩ
R11	5181500000	5.6kΩ
R12	⚠ 5184247000	82Ω Nonflammable
R13	⚠ 5185191000	0.33Ω 2W Metal Film
R14	5240173000	100kΩ

REF. NO.	PARTS NO.	DESCRIPTION
	CAPACITORS	
C1	⚠ 5263164500	Metalized 0.047μF 250V
C2, C3	⚠ 5262001800	Elec. 4700μF 35V
C4, C5	5260160750	Elec. 1μF 50V
C6, C7	5054204000	Ceramic 0.01μF 50V
C8, C9	5260165252	Elec. 47μF 25V
C10, C11	5054204000	Ceramic 0.01μF 50V
C12	⚠ 5263164500	Metalized 0.047μF 250V
C13	⚠ 5262001900	Elec. 1000μF 100V
C14	5054223000	Ceramic 0.01μF 500V
C15	5260163150	Elec. 10μF 100V
C16	5054223000	Ceramic 0.01μF 500V
C17	⚠ 5263164500	Metalized 0.047μF 250V
C18	⚠ 5262002000	Elec. 10000μF 25V
C19	5260165252	Elec. 47μF 25V
C20	5054204000	Ceramic 0.01μF 50V
C21	⚠ 5263164500	Metalized 0.047μF 250V
C22, C23	⚠ 5262002500	Elec. 4700μF 50V
C24～C27	5054204000	Ceramic 0.01μF 50V
	CONNECTOR PLUGS	
P1	5336091000	10P
P2	5336090700	7P
P3	5336070600	6P
	FUSES	
F1, F2	⚠ 5142189000	T2A 250V Mini [E, UK, A]
F3	⚠ 5041140000	T1A 250V Mini [E, UK, A]
F4	⚠ 5142192000	T4A 250V Mini [E, UK, A]
F5, F6	⚠ 5041140000	T1A 250V Mini [E, UK, A]
	MISCELLANEOUS	
	5332014200	Holder, Mini Fuse (12 used) [E, UK, A]

3-20. FUSE PCB Ass'y [M-512]

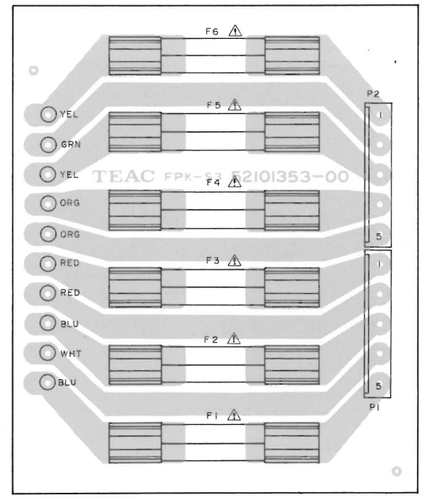

3-21. SW E PCB Ass'y

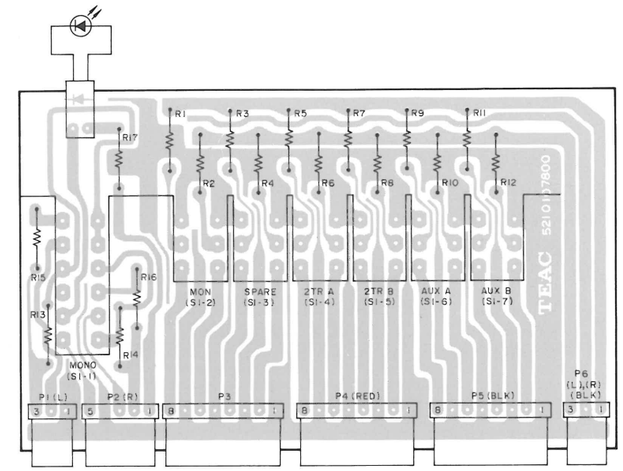

FUSE PCB Ass'y [M-512]

REF. NO.	PARTS NO.	DESCRIPTION
	* 5200135300	PCB Ass'y [J, U, C, GE]
	* 5200135310	PCB Ass'y [E, UK, A]
	5210135300	PCB
	FUSES	
F1, F2	⚠ 5307021600	4A 250V [J, U, C, GE]
F3	⚠ 5307021000	2A 250V [J, U, C, GE]
F4	⚠ 5307021600	4A 250V [J, U, C, GE]
F5, F6	⚠ 5307021000	2A 250V [J, U, C, GE]
	MISCELLANEOUS	
P1, P2	5336090500	Connector 5P (WHT)
	5041237000	Fuse Holder (12 used) [J, U, C, GE]

SW E PCB Ass'y

REF. NO.	PARTS NO.	DESCRIPTION
	*5200107800	PCB Ass'y
	5210107800	PCB
	CARBON RESISTORS	
	All resistors are rated ±5% tolerance at 1/4W.	
R1～R12	5181514000	22kΩ
R13, R14	5181506000	10kΩ
R15, R16	5181514000	22kΩ
R17	5181470000	330Ω
	CONNECTOR PLUGS	
P1	5122146000	3P (WHT)
P2	5122148000	5P (WHT)
P3	5122151000	8P (WHT)
P4	5122459000	8P (RED)
P5	5122208000	8P (BLK)
P6	5122203000	3P (BLK)
	MISCELLANEOUS	
S1	5300030200	Switch, Push
D1	5225006900	LED, PR3432S
	5122373000	Connector Socket, 2P (WHT)

3-22. IN/OUT AMPL. PCB Ass'y

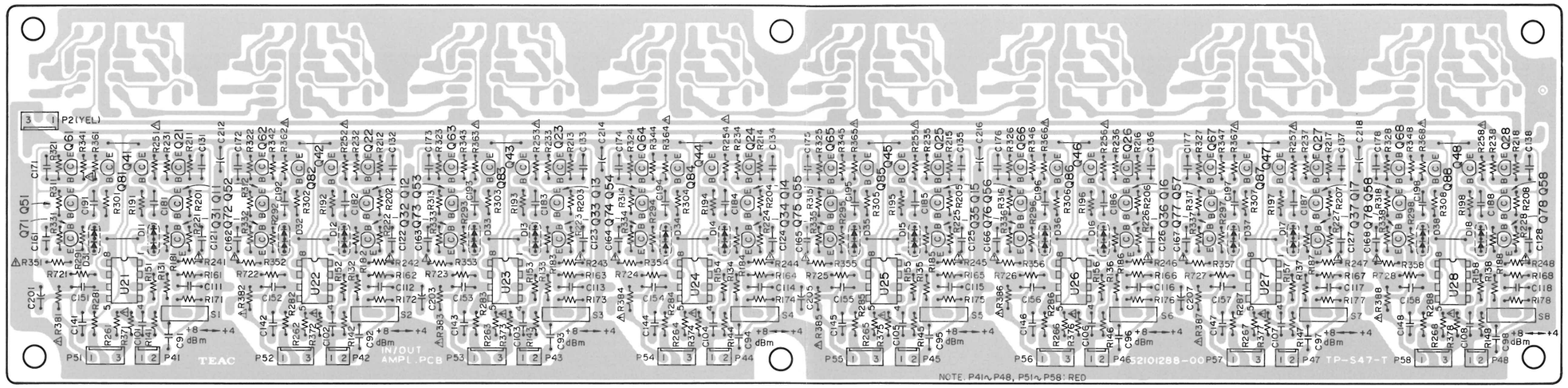

IN/OUT AMPL. PCB Ass'y

REF. NO.	PARTS NO.	DESCRIPTION
	* 5200128810	PCB Ass'y
	5210128800	PCB
		IC'S
U021 ~ U028	5220416600	NJM2041D-D
		TRANSISTORS
Q011 ~ Q018	5145151000	2SC-1815GR
Q021 ~ Q028	5145150000	2SA-1015GR
Q031 ~ Q038	5230773800	2SC-2655Y
Q041 ~ Q048	5230014000	2SA-1020Y
Q051 ~ Q058	5145151000	2SC-1815GR
Q061 ~ Q068	5145150000	2SA-1015GR
Q071 ~ Q078	5230773800	2SC-2655Y
Q081 ~ Q088	5230014000	2SA-1020Y
		DIODES
D011 ~ D018	5224015300	MC931
D021 ~ D028	5224015300	MC931

REF. NO.	PARTS NO.	DESCRIPTION
		CARBON RESISTORS
		All resistors are rated ± 5% tolerance at 1/4 watt.
R131 ~ R138	5240028220	1kΩ
R141 ~ R148	5240031420	22kΩ
R151 ~ R158	5240030620	10kΩ
R161 ~ R168	5240030620	10kΩ
R171 ~ R178	5240030820	12kΩ
R181 ~ R188	5240031020	15kΩ
R191 ~ R198	5240031020	15kΩ
R201 ~ R208	5240029820	4.7kΩ
R211 ~ R218	5240029820	4.7kΩ
R221 ~ R228	5240028220	1kΩ
R231 ~ R238	5240028220	1kΩ
R241 ~ R248	⚠ 5183546000	4.7Ω Nonframmable
R251 ~ R258	⚠ 5183546000	4.7Ω Nonframmable
R261 ~ R268	5241320600	10kΩ metalized
R271 ~ R278	5241320600	10kΩ metalized
R281 ~ R288	5240030620	10kΩ
R291 ~ R298	5240031020	15kΩ
R301 ~ R308	5240031020	15kΩ
R311 ~ R318	5240029820	4.7kΩ
R321 ~ R328	5240029820	4.7kΩ
R331 ~ R338	5240028220	1kΩ
R341 ~ R348	5240028220	1kΩ
R351 ~ R358	⚠ 5183546000	4.7Ω Nonframmable
R361 ~ R368	⚠ 5183546000	4.7Ω Nonframmable
R371 ~ R378	⚠ 5183554000	10Ω Nonframmable
R381 ~ R388	⚠ 5183554000	10Ω Nonframmable

REF. NO.	PARTS NO.	DESCRIPTION			
		CAPACITORS			
C091 ~ C098	5260067050	Elec.	10μF	16V	(B.P.)
C101 ~ C108	5260067050	Elec.	10μF	16V	(B.P.)
C111 ~ C118	5172206000	Ceramic.	33pF	50V	
C121 ~ C128	5172204000	Ceramic.	22pF	50V	
C131 ~ C138	5172204000	Ceramic.	22pF	50V	
C141 ~ C148	5260067050	Elec.	10μF	16V	(B.P.)
C151 ~ C158	5172206000	Ceramic.	33pF	50V	
C161 ~ C168	5172204000	Ceramic.	22pF	50V	
C171 ~ C178	5172204000	Ceramic.	22pF	50V	
C181 ~ C188	5260067050	Elec.	10μF	16V	(B.P.)
C191 ~ C198	5260067050	Elec.	10μF	16V	(B.P.)
C201, C203,	5260165252	Elec.	47μF	25V	
C205, C207	5260165252	Elec.	47μF	25V	
C212, C214	5260165252	Elec.	47μF	25V	
C216, C218	5260165252	Elec.	47μF	25V	
		CONNECTOR PLUGS			
P2	5336107300	3P (YEL)			
P041 ~ P048	5122299000	2P (RED)			
P051 ~ P058	5122300000	3P (RED)			
		SWITCHES			
S1 ~ S8	5300908100	Slide, 1 – 2			

3-23. MOTHER A PCB Ass'y [M-520]

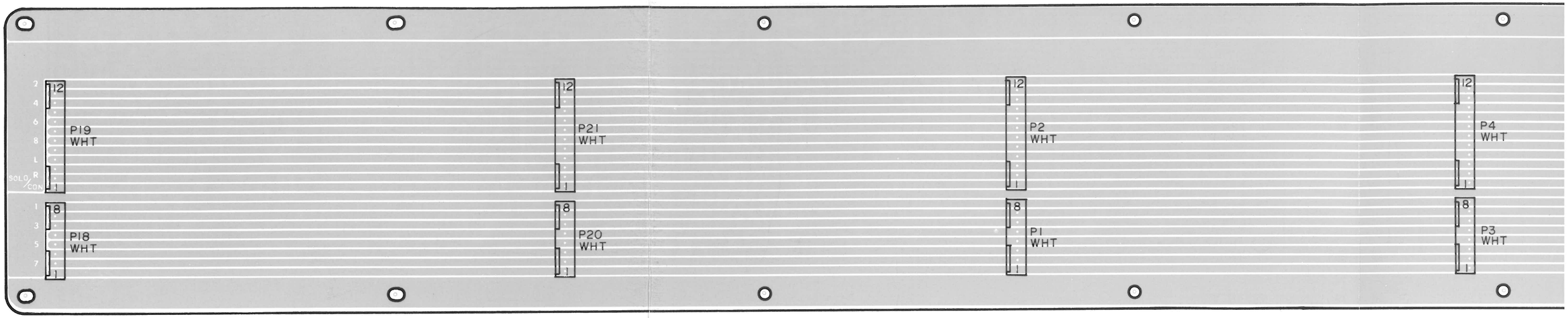

3-24. MOTHER B PCB Ass'y [M-520]

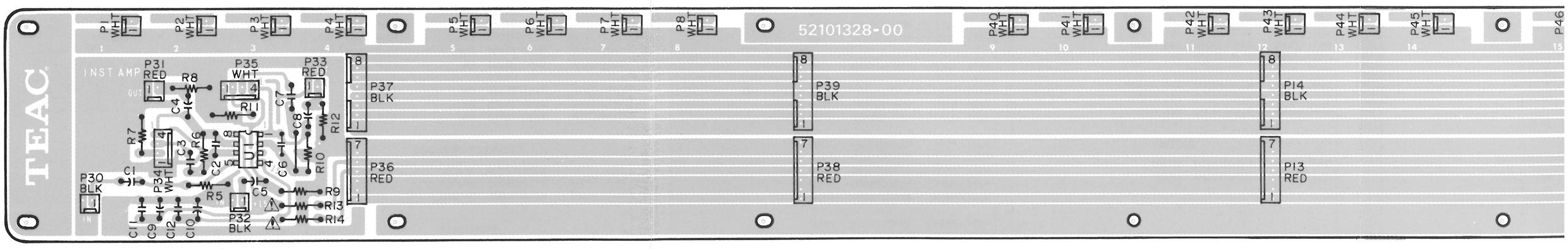

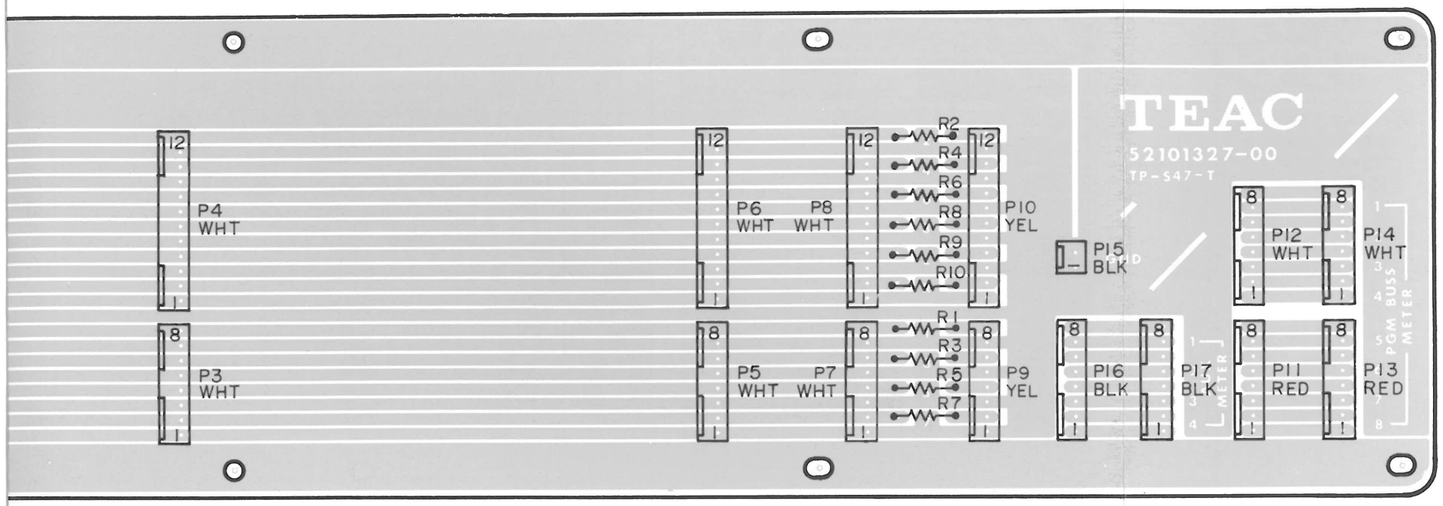

MOTHER A PCB Ass'y [M-520]

REF. NO.	PARTS NO.	DESCRIPTION
	5200132700	PCB Ass'y
	5210132700	PCB
	CONNECTOR PLUGS	
P1	5122132000	8P (WHT)
P2	5122136000	12P (WHT)
P3	5122132000	8P (WHT)
P4	5122136000	12P (WHT)
P5	5122132000	8P (WHT)
P6	5122136000	12P (WHT)
P7	5122132000	8P (WHT)
P8	5122136000	12P (WHT)
P9	5336107800	8P (YEL)
P10	5336108200	12P (YEL)
P11, P12	5122132000	8P (WHT)
P13	5122305000	8P (RED)
P14	5122132000	8P (WHT)
P15	5122183000	2P (BLK)
P16, P17	5122189000	8P (BLK)
P18	5122132000	8P (WHT)
P19	5122136000	12P (WHT)
P20	5122132000	8P (WHT)
P21	5122136000	12P (WHT)
	CARBON RESISTORS	
	All resistors are rated ± 5% tolerance 1/4 watt.	
R1 ~ R10	5181514000	22 kΩ

MOTHER B PCB Ass'y [M-520]

REF. NO.	PARTS NO.	DESCRIPTION
	*5200132800	PCB Ass'y
	5210132800	PCB
		IC
U1	5220416600	NJM4041DD
		CARBON RESISTORS
		All resistors are rated ±5% tolerance 1/4 watt.
R1 ~ R4	5181514000	22kΩ
R5	5181538000	220kΩ
R6	5181554000	1MΩ
R7	5181458000	100Ω
R8	5181522000	47kΩ
R9	5181538000	220kΩ
R10	5181554000	1MΩ
R11	5181458000	100Ω
R12	5181522000	47kΩ
R13, R14	5183566000	33Ω Nonflammable
		CAPACITORS
C1	5260162550	Elec. 10μF 16V
C2	5172212000	Ceramic 100pF
C3	5260069650	Elec. 47μF 16V (B.P)
C4	5260163452	Elec. 22μF 25V
C5	5260162550	Elec. 10μF 16V
C6	5172212000	Ceramic 100pF
C7	5260069650	Elec. 47μF 16V (B.P)
C8	5260163452	Elec. 22μF 25V
C9, C10	5260165252	Elec. 47μF 25V
C11, C12	5173433000	Ceramic 0.01μF 50V

REF. NO.	PARTS NO.	DESCRIPTION
		CONNECTOR PLUGS
P1 ~ P12	5122126000	2P (WHT)
P13	5122304000	7P (RED)
P14	5122189000	8P (BLK)
P15	5122304000	7P (RED)
P16	5122189000	8P (BLK)
P17	5122304000	7P (RED)
P18, P19	5122189000	8P (BLK)
P20	5122132000	8P (WHT)
P21	5122193000	12P (BLK)
P22	5122309000	12P (RED)
P23	5122128000	4P (WHT)
P24	5122131000	7P (WHT)
P25	5122130000	6P (WHT)
P26	5122301000	4P (RED)
P30	5122183000	2P (BLK)
P31	5122299000	2P (RED)
P32	5122183000	2P (BLK)
P33	5122299000	2P (RED)
P34, P35	5122128000	4P (WHT)
P36	5122304000	7P (RED)
P37	5122189000	8P (BLK)
P38	5122304000	7P (RED)
P39	5122189000	8P (BLK)
P40 ~ P47	5122126000	2P (WHT)

3-25. EXT. LED PCB Ass'y

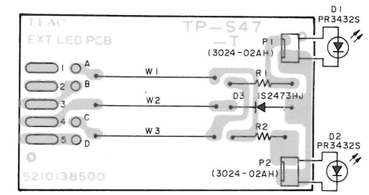

EXT. LED PCB Ass'y

REF. NO.	PARTS NO.	DESCRIPTION
	*5200138500	PCB Ass'y
	5210138500	PCB
D1, D2	5225006900	LED PR3432S (RED)
D3	5143118000	Diode, 1S2473HJ
R1, R2	5181482000	Carbon Resistor 1kΩ 1/4W 5%
P1, P2	5122373000	Connector Socket 2P (WHT)

3-26. EXT. SW PCB Ass'y

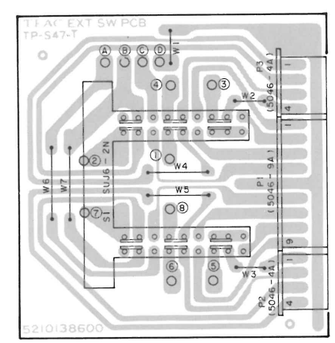

EXT. SW PCB Ass'y

REF. NO.	PARTS NO.	DESCRIPTION
	*5200138600	PCB Ass'y
	5210138600	PCB
S1	5300029600	Switch, Push SUJ6-2N
P1	5122152000	Connector Plug, 9P (WHT)
P2	5122147000	Connector Plug, 4P (WHT)
P3	5336065400	Connector Plug, 4P (BLK)
	5800395700	Plate, Cord

3-27. REGURATOR PCB Ass'y [M-512]

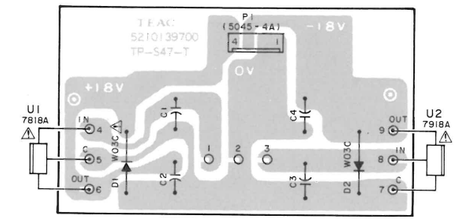

REGULATOR PCB Ass'y [M-512]

REF. NO.	PARTS NO.	DESCRIPTION
	* 5200139700	PCB Ass'y
	5210139700	PCB
		IC'S
U1	⚠ 5220415700	NJM 7818A
U2	⚠ 5220421900	NJM 7918A
		DIODES
D1 ~ D2	⚠ 5143089000	W03C
		CAPACITORS
C1 ~ C4	5260165352	Elec. 47μF 35V
		MISCELLANEOUS
P1	5122301000	Connector Plug 4P (RED)

3-28. POWER SUPPLY PCB Ass'y [M-520]

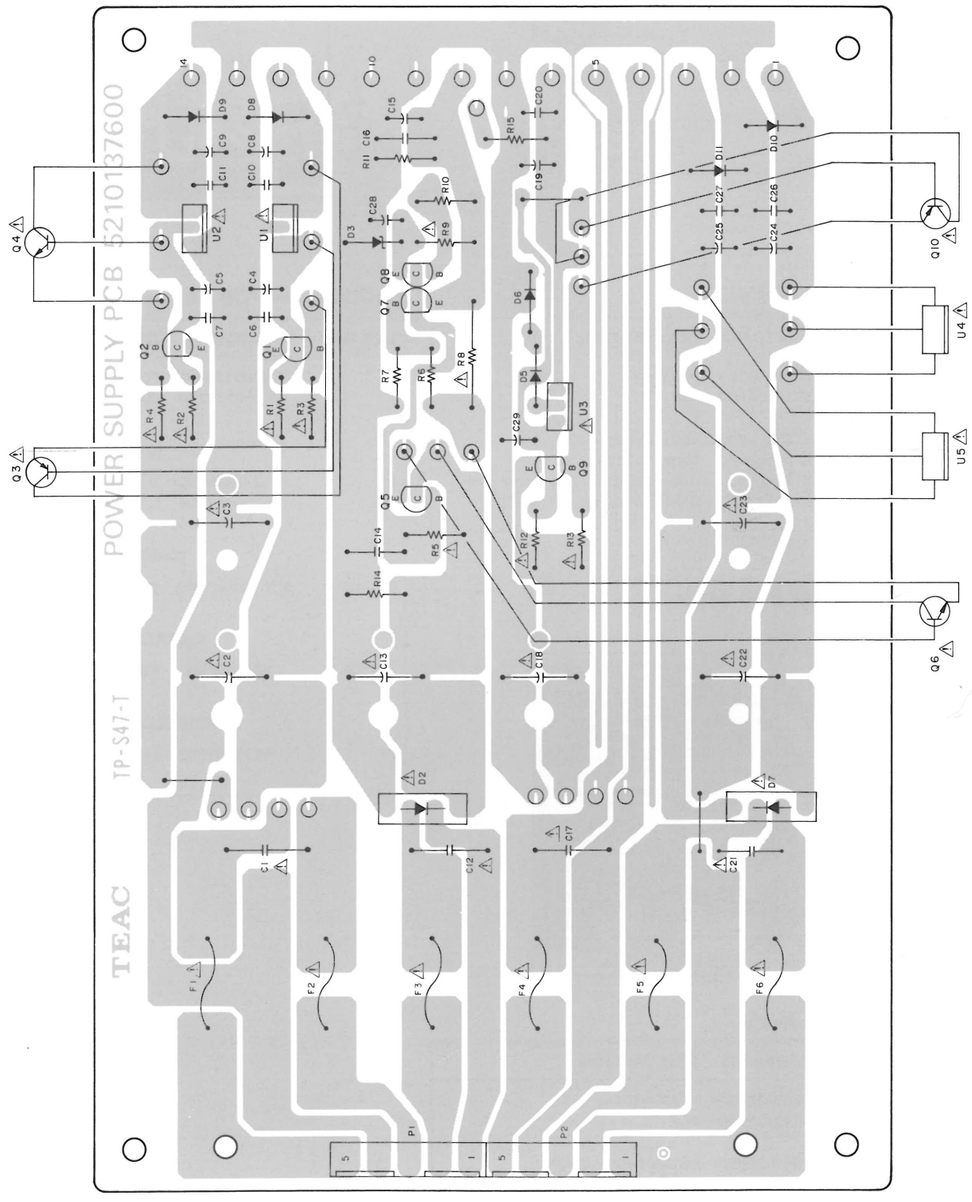

POWER SUPPLY PCB Ass'y [M-520]

REF. NO.	PARTS NO.	DESCRIPTION
	* 5200137600	PCB Ass'y [J, U, C, GE]
	* 5200137620	PCB Ass'y [E, UK, A]
	5210137600	PCB
		IC'S
U1	⚠ 5220415600	NJM7815A
U2	⚠ 5220412400	UA7915C
U3	⚠ 5220405100	μPC78M05H
U4	⚠ 5220415700	NJM7818A
U5	⚠ 5220421900	NJM7918A
		TRANSISTORS
Q1	5230014000	2SA1020 (Y)
Q2	5230773800	2SC2655 (Y)
Q3	⚠ 5230017700	2SA1264 (O)
Q4	⚠ 5230779400	2SC3181 (O)
Q5	5230773800	2SC2655 (Y)
Q6	⚠ 5230779400	2SC3181 (O)
Q7, Q8	5230773800	2SC2655 (Y)
Q9	5230014000	2SA1020 (Y)
Q10	⚠ 5230506400	2SB755 (O)
		DIODES
D2	⚠ 5228006600	KBP04GI
D3	5224545501	RD24EB3, Zener
D5, D6	5143118000	1S2473HJ
D7	⚠ 5228006600	KBP04GI
D8 ~ D11	5143089000	W03C
		CARBON RESISTORS All resistors are rated ±5% tolerance at 1/4 watt, unless otherwise noted.
R1, R2	⚠ 5184247000	82Ω Nonflammable
R3, R4	⚠ 5185191000	0.33Ω Metal Film
R5	⚠ 5182042000	6.8 kΩ Nonflammable
R6	5181486000	1.5 kΩ
R7	5181522000	47 kΩ
R8	⚠ 5052810000	10Ω Metal Oxide Film 2W
R9	⚠ 5180094000	3.3kΩ 1/2W
R10	5181498000	4.7kΩ
R11	5181500000	5.6kΩ
R12	⚠ 5184247000	82Ω Nonflammable
R13	⚠ 5185191000	0.33Ω Metal Film
R14	5240173000	100kΩ
R15	5181476000	560Ω

REF. NO.	PARTS NO.	DESCRIPTION		
		CAPACITORS		
C1	⚠ 5263164500	Metalized Mylar	0.047μF	250V
C2, C3	⚠ 5262001800	Elec.	4700μF	35V
C4, C5	5260160750	Elec.	1μF	50V
C6, C7	5054204000	Ceramic	0.01μF	50V
C8, C9	5260165252	Elec.	47μF	25V
C10, C11	5054204000	Ceramic	0.01μF	50V
C12	⚠ 5263164500	Metalized Mylar	0.047μF	250V
C13	⚠ 5262001900	Elec.	1000μF	100V
C14	5054223000	Ceramic	0.01μF	500V
C15	5260163150	Elec.	10μF	100V
C16	5054223000	Ceramic	0.01μF	500V
C17	⚠ 5263164500	Metalized Mylar	0.047μF	250V
C18	⚠ 5262002000	Elec.	10000μF	25V
C19	5260165252	Elec.	47μF	25V
C20	5054204000	Ceramic	0.01μF	50V
C21	⚠ 5263164500	Metalized Mylar	0.047μF	250V
C22, C23	⚠ 5262001800	Elec.	4700μF	35V
C24, C25	5260165252	Elec.	47μF	25V
C26, C27	5054204000	Ceramic	0.01μF	50V
C28	5260162850	Elec.	10μF	50V
C29	5260160750	Elec.	1μF	50V
		FUSES		
F1, F2	⚠ 5307021600	4A 250V [J, U, C, GE]		
	⚠ 5142192000	T4A 250V Mini [E, UK, A]		
F3	⚠ 5307021000	2A 250V [J, U, C, GE]		
	⚠ 5142189000	T2A 250V Mini [E, UK, A]		
F4	⚠ 5307021600	4A 250V [J, U, C, GE]		
	⚠ 5142192000	T4A 250V Mini [E, UK, A]		
F5, F6	⚠ 5307021000	2A 250V [J, U, C, GE]		
	⚠ 5142189000	T2A 250V Mini [E, UK, A]		
		MISCELLANEOUS		
	5041237000	Holder, Fuse (12 used) [J, U, C, GE]		
	5332014200	Holder, Mini Fuse (12 used) [E, UK, A]		
P1, P2	5336095000	Connector Plug, 5P		

4. SCHEMATIC DIAGRAM

4-1. In/Out Ampl. PCB/Regulator PCB

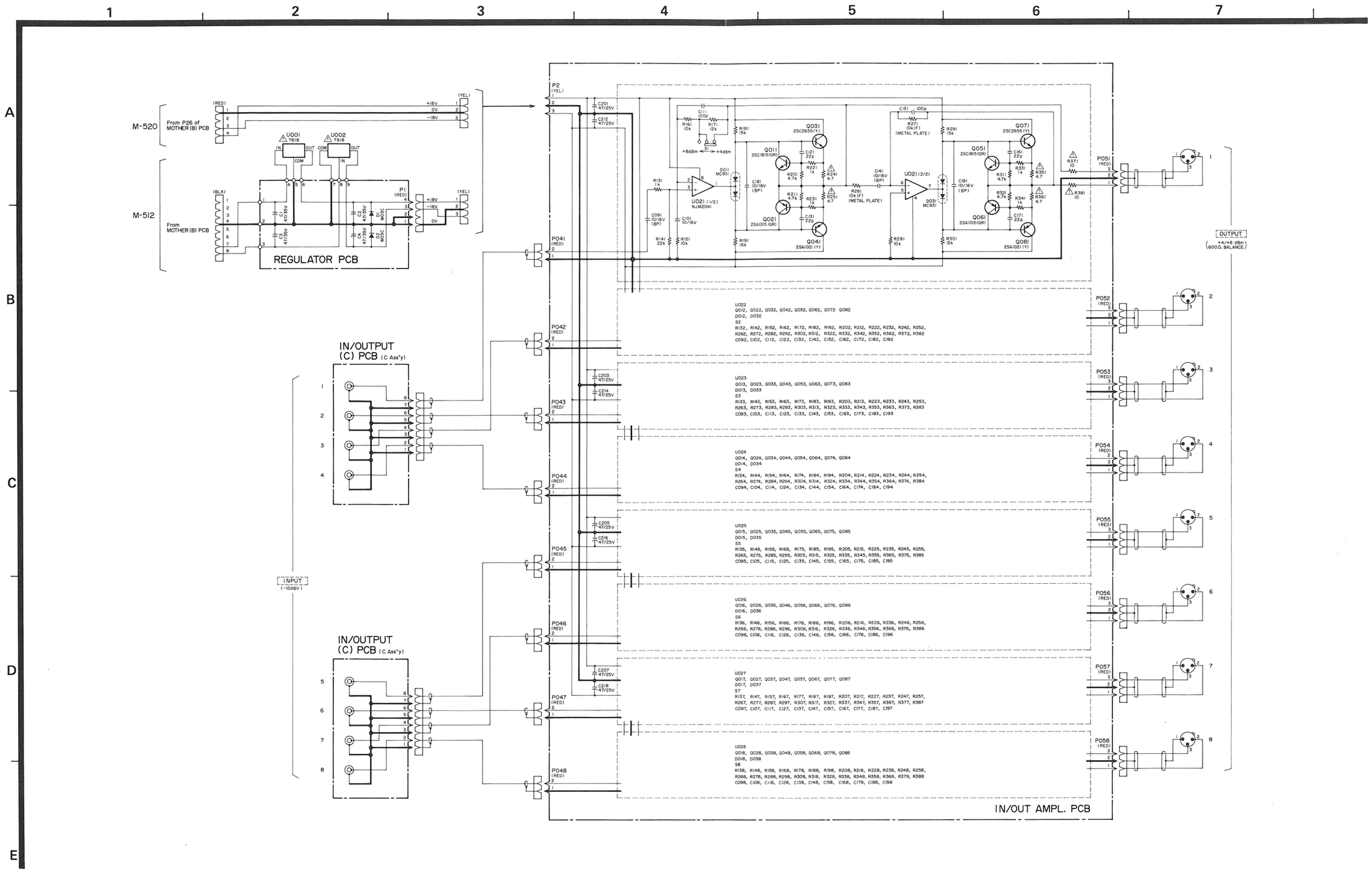

4-2. Talkback PCB

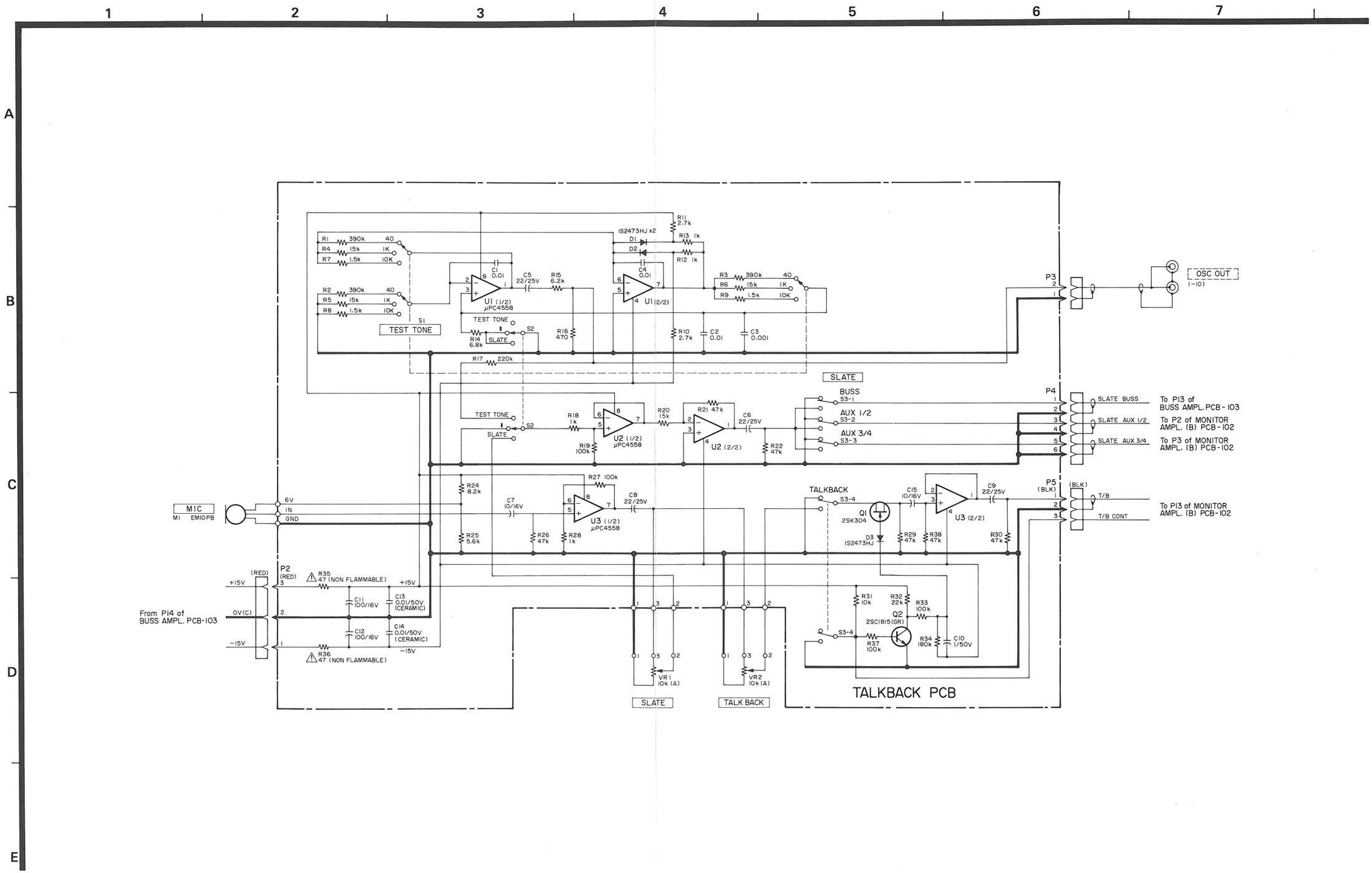

4-3. Mother (A) PCB [M-512]

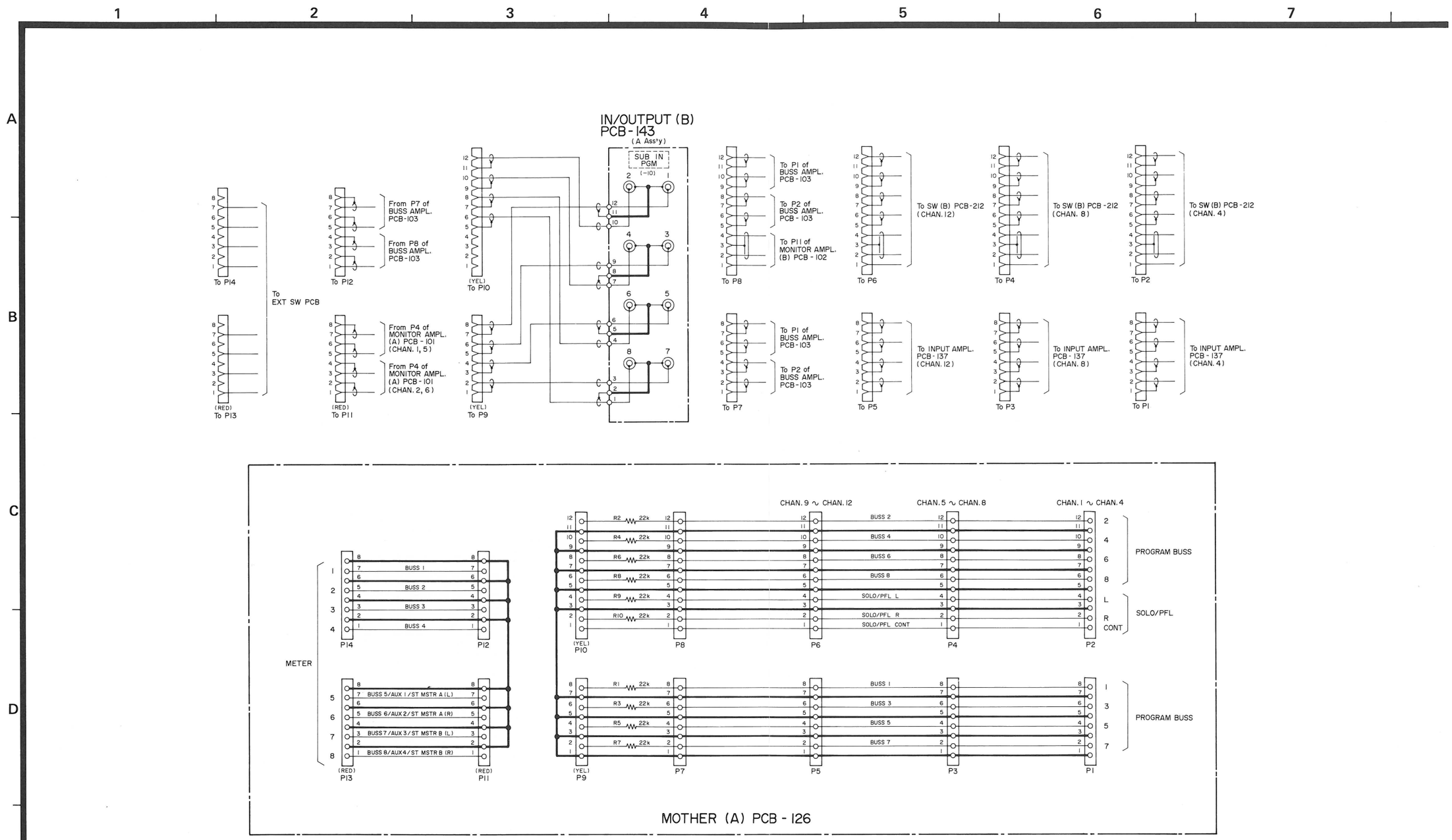

4-4. Mother (A) PCB [M-520]

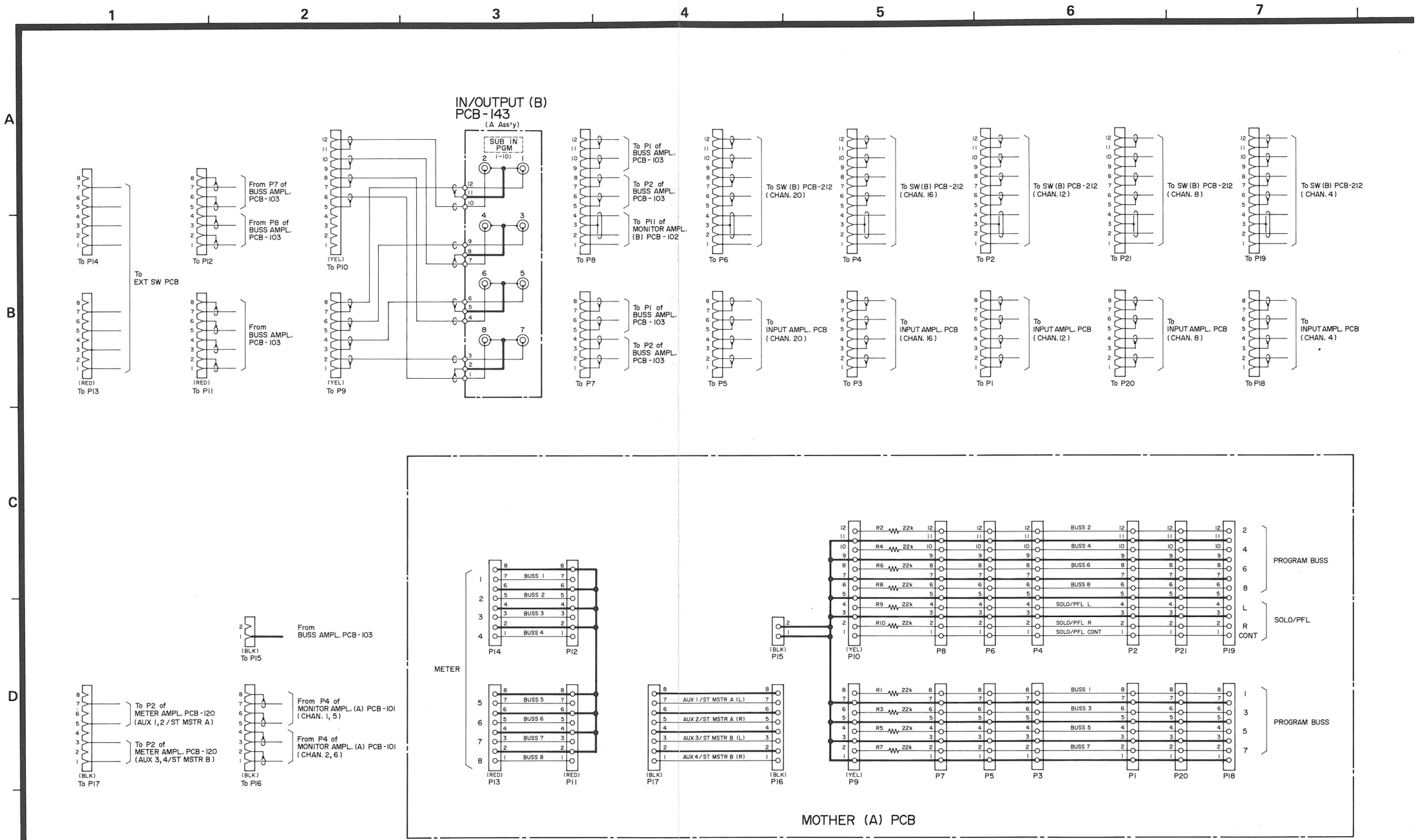

4-5. Power Supply PCB [M-512]

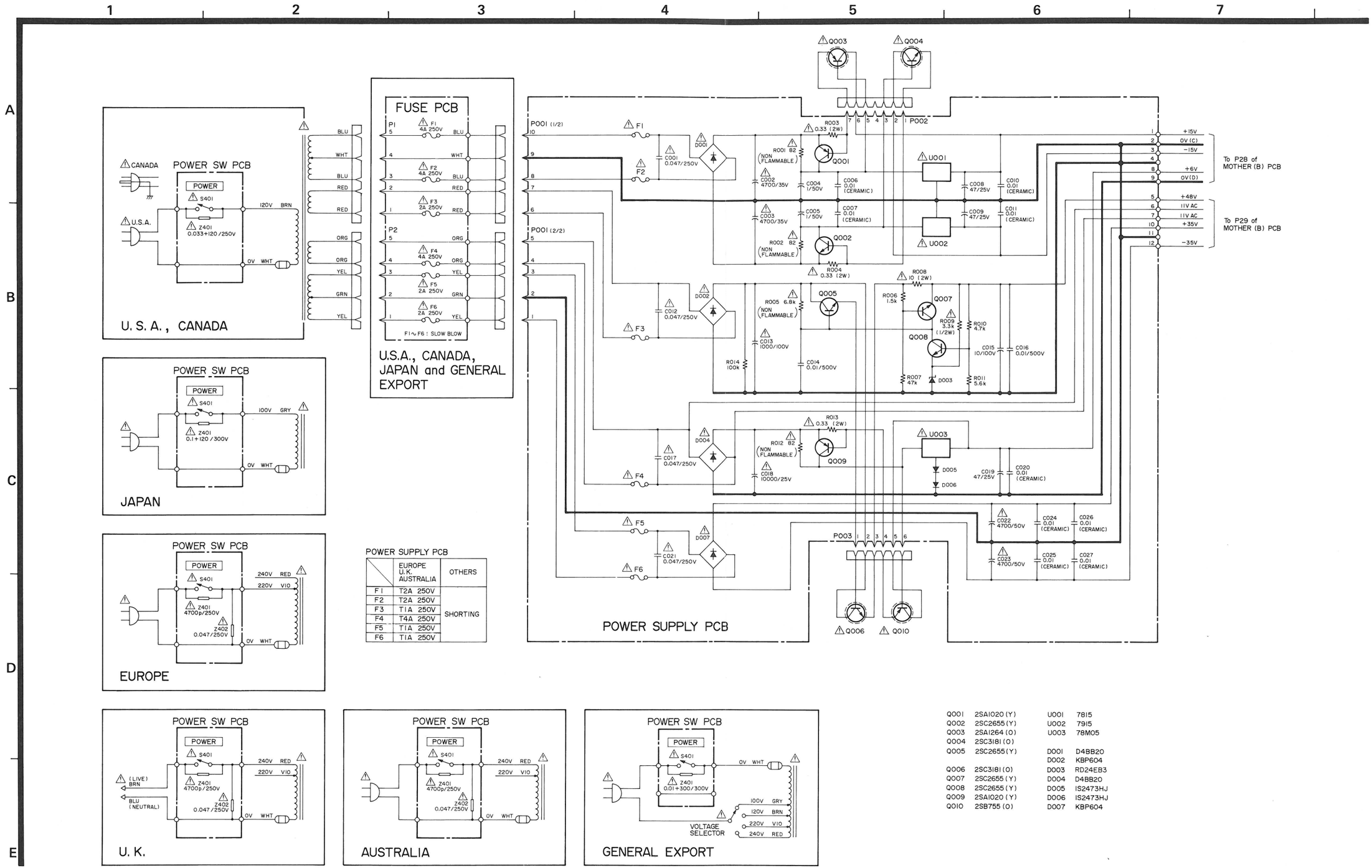

POWER SUPPLY PCB

	EUROPE U.K. AUSTRALIA	OTHERS
F1	T2A 250V	SHORTING
F2	T2A 250V	
F3	T1A 250V	
F4	T4A 250V	
F5	T1A 250V	
F6	T1A 250V	

Q001	2SA1020 (Y)	U001	7815
Q002	2SC2655 (Y)	U002	7915
Q003	2SA1264 (O)	U003	78M05
Q004	2SC3181 (O)		
Q005	2SC2655 (Y)	D001	D4BB20
		D002	KBP604
Q006	2SC3181 (O)	D003	RD24EB3
Q007	2SC2655 (Y)	D004	D4BB20
Q008	2SC2655 (Y)	D005	IS2473HJ
Q009	2SA1020 (Y)	D006	IS2473HJ
Q010	2SB755 (O)	D007	KBP604

4-6. Power Supply Unit [M-520]

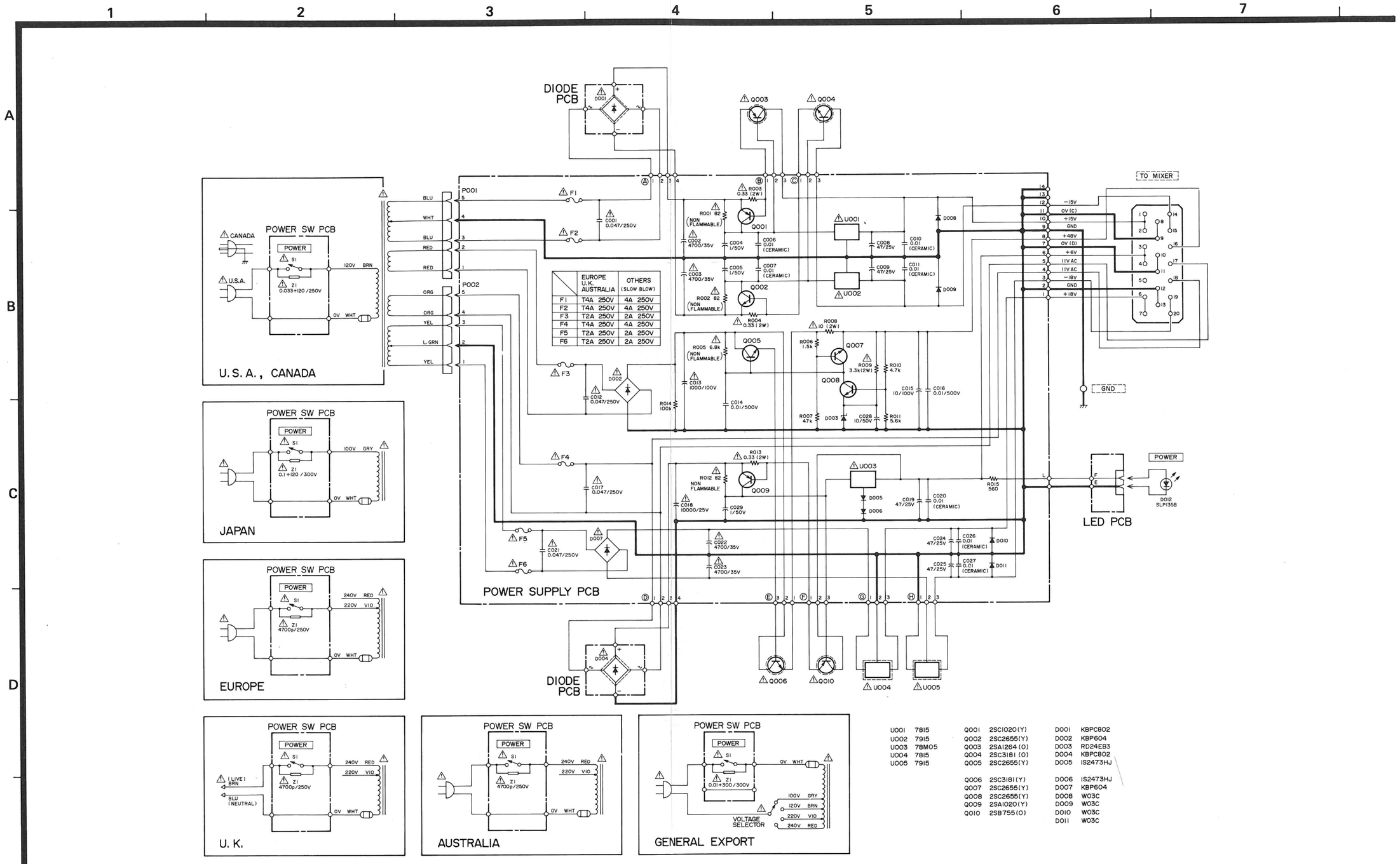

	EUROPE U.K. AUSTRALIA	OTHERS (SLOW BLOW)
F1	T4A 250V	4A 250V
F2	T4A 250V	4A 250V
F3	T2A 250V	2A 250V
F4	T4A 250V	4A 250V
F5	T2A 250V	2A 250V
F6	T2A 250V	2A 250V

U001	7815	Q001	2SC1020(Y)	D001	KBPC802
U002	7915	Q002	2SC2655(Y)	D002	KBP604
U003	78M05	Q003	2SA1264(O)	D003	RD24EB3
U004	7815	Q004	2SC3181(O)	D004	KBPC802
U005	7915	Q005	2SC2655(Y)	D005	IS2473HJ
		Q006	2SC3181(Y)	D006	IS2473HJ
		Q007	2SC2655(Y)	D007	KBP604
		Q008	2SC2655(Y)	D008	W03C
		Q009	2SA1020(Y)	D009	W03C
		Q010	2SB755(O)	D010	W03C
				D011	W03C

Input Board

4-7. In/Out (A) PCB

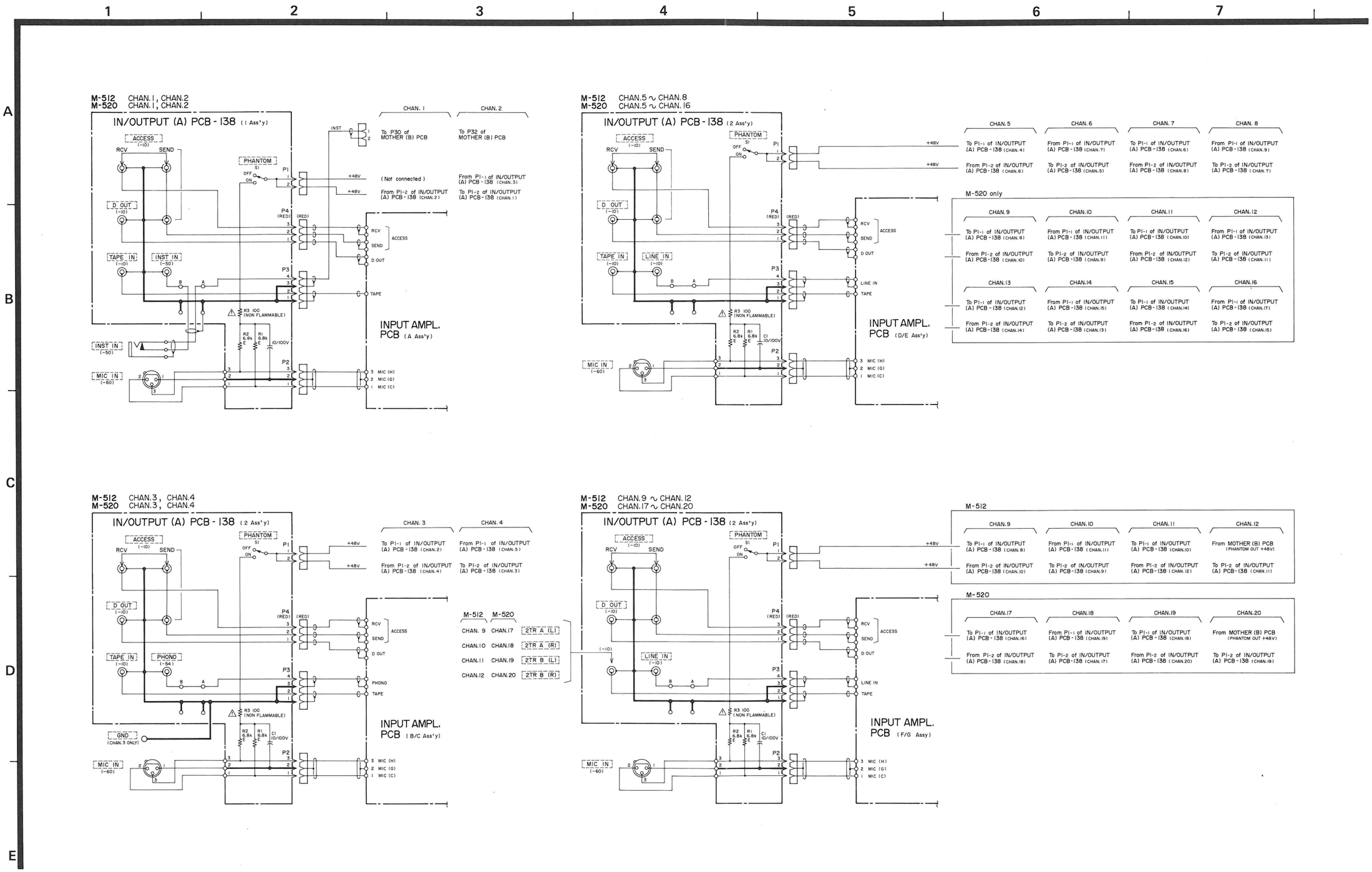

← Input Board

4-8. Mother (B) PCB [M-512]

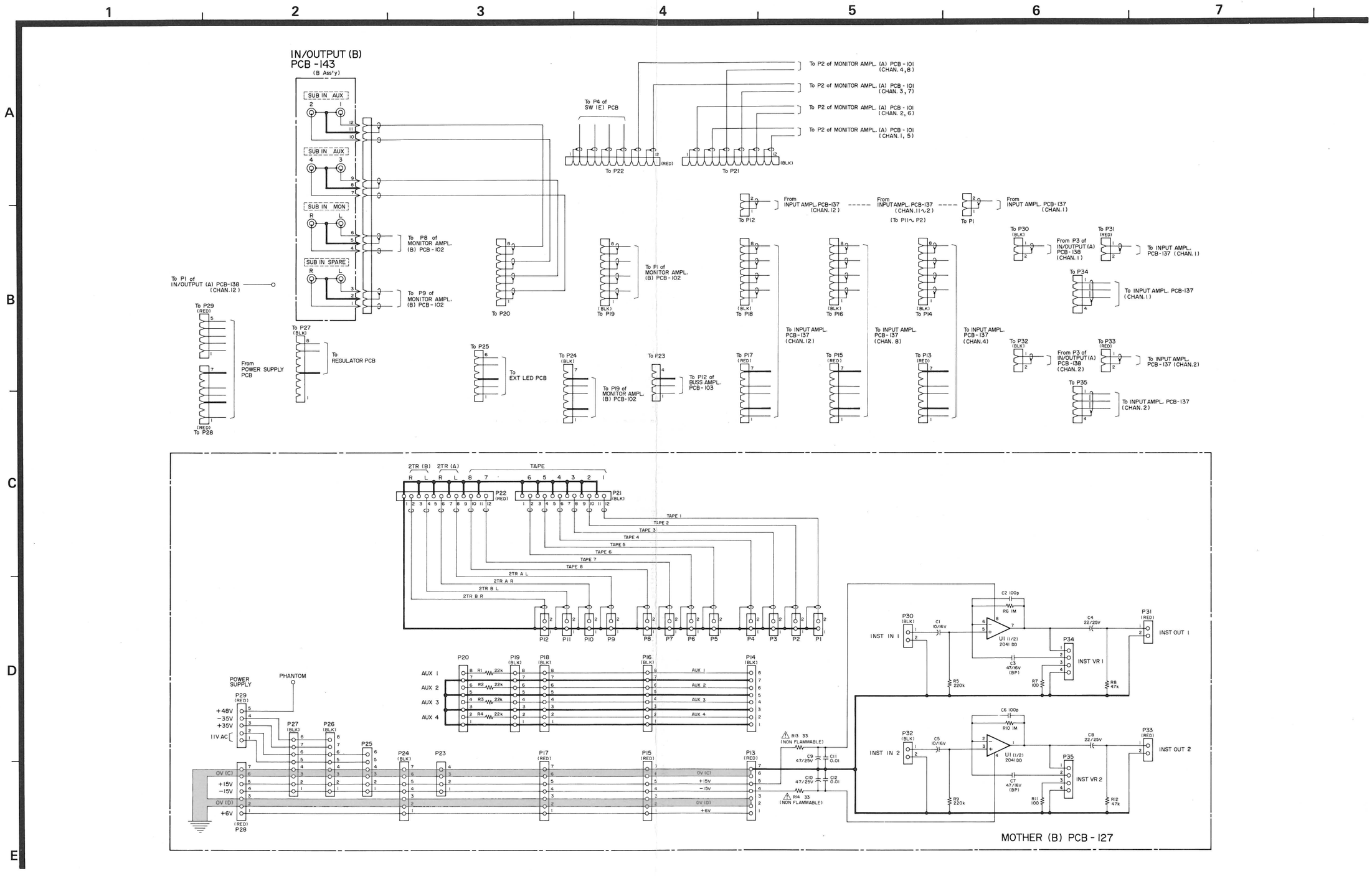

4-9. Mother (B) PCB [M-520]

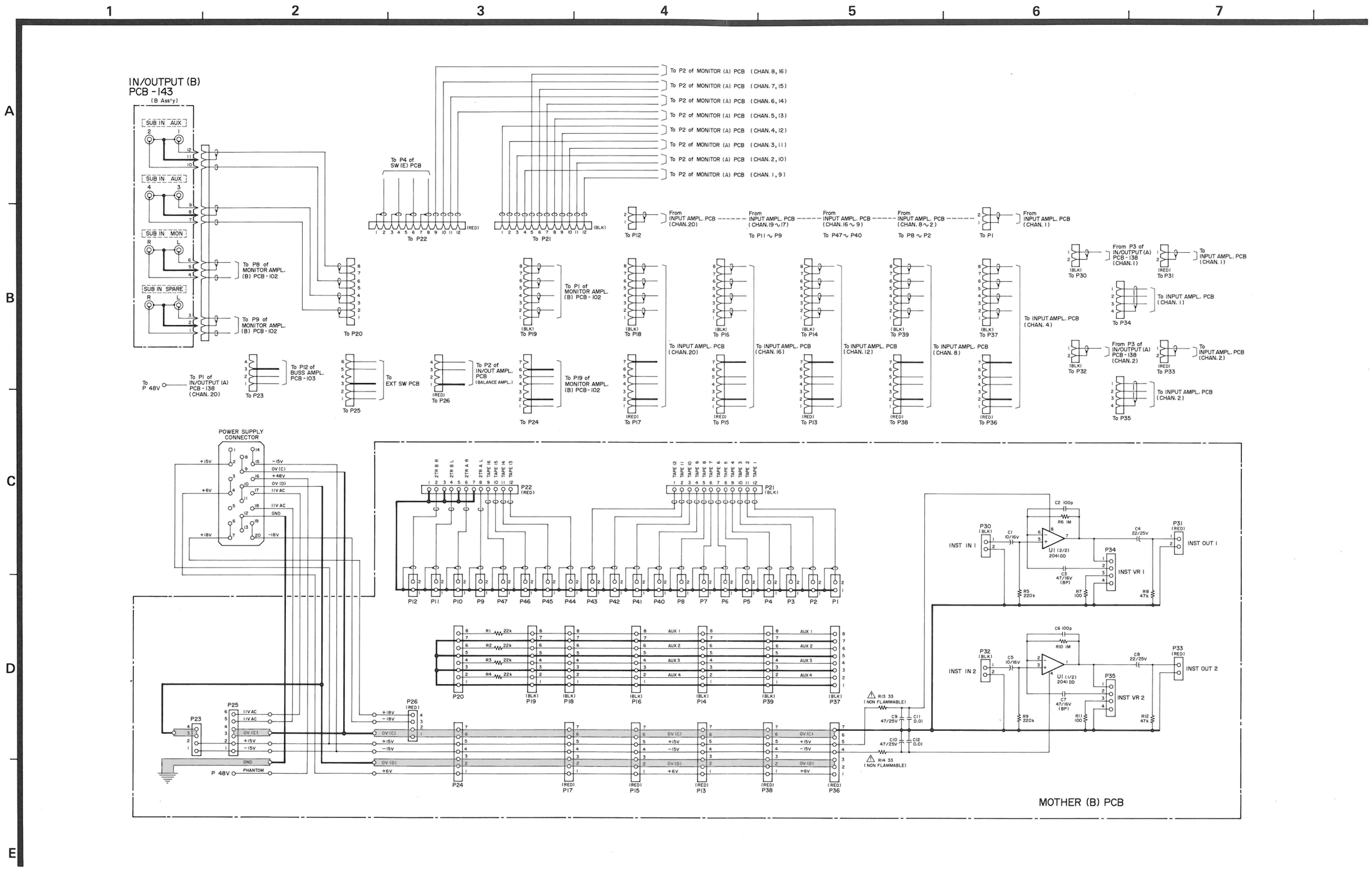

4-10. Meter Ampl. PCB/EXT LED PCB/EXT SW PCB

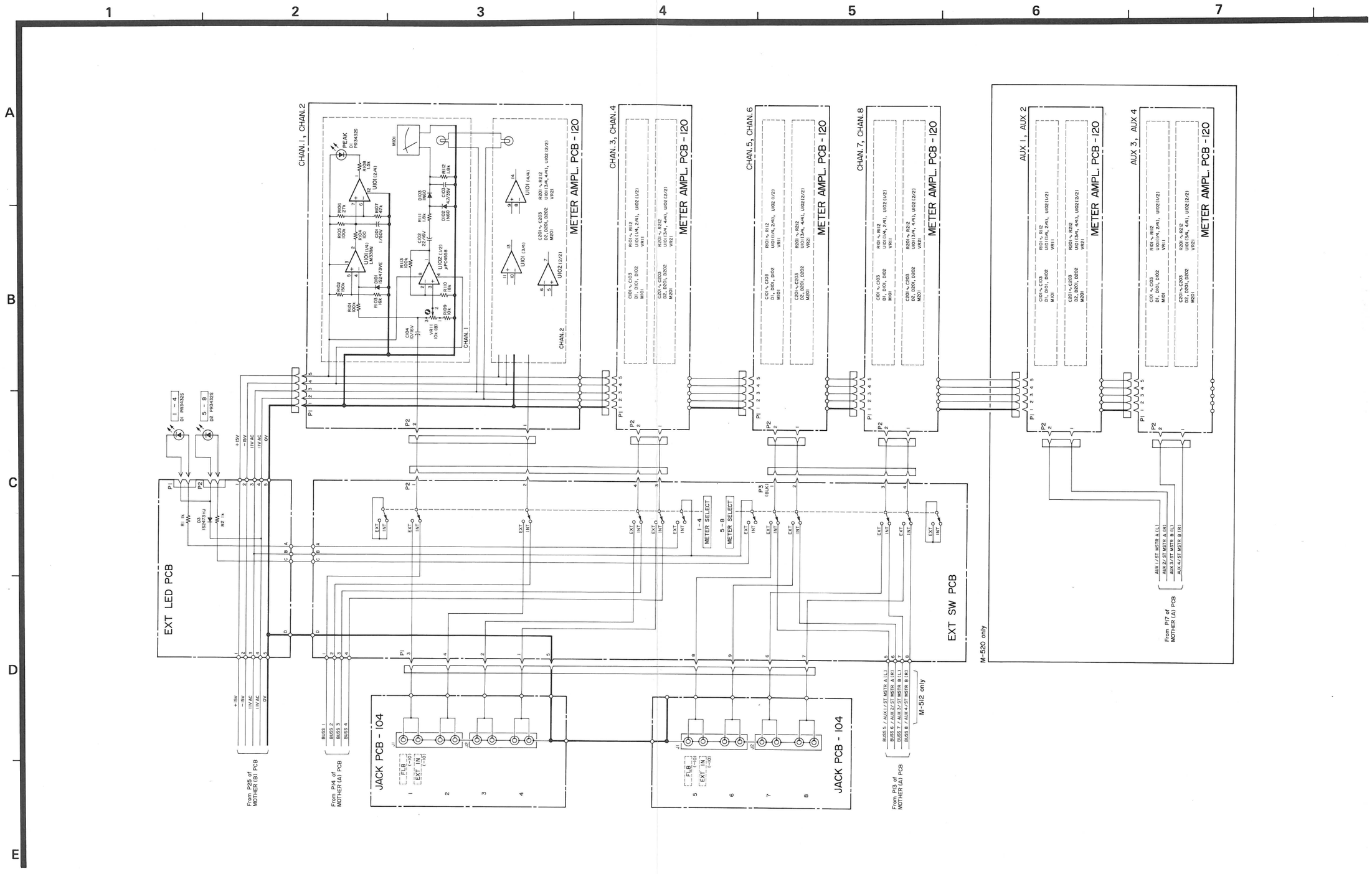

4-11. Monitor Ampl. (A) PCB [M-512]

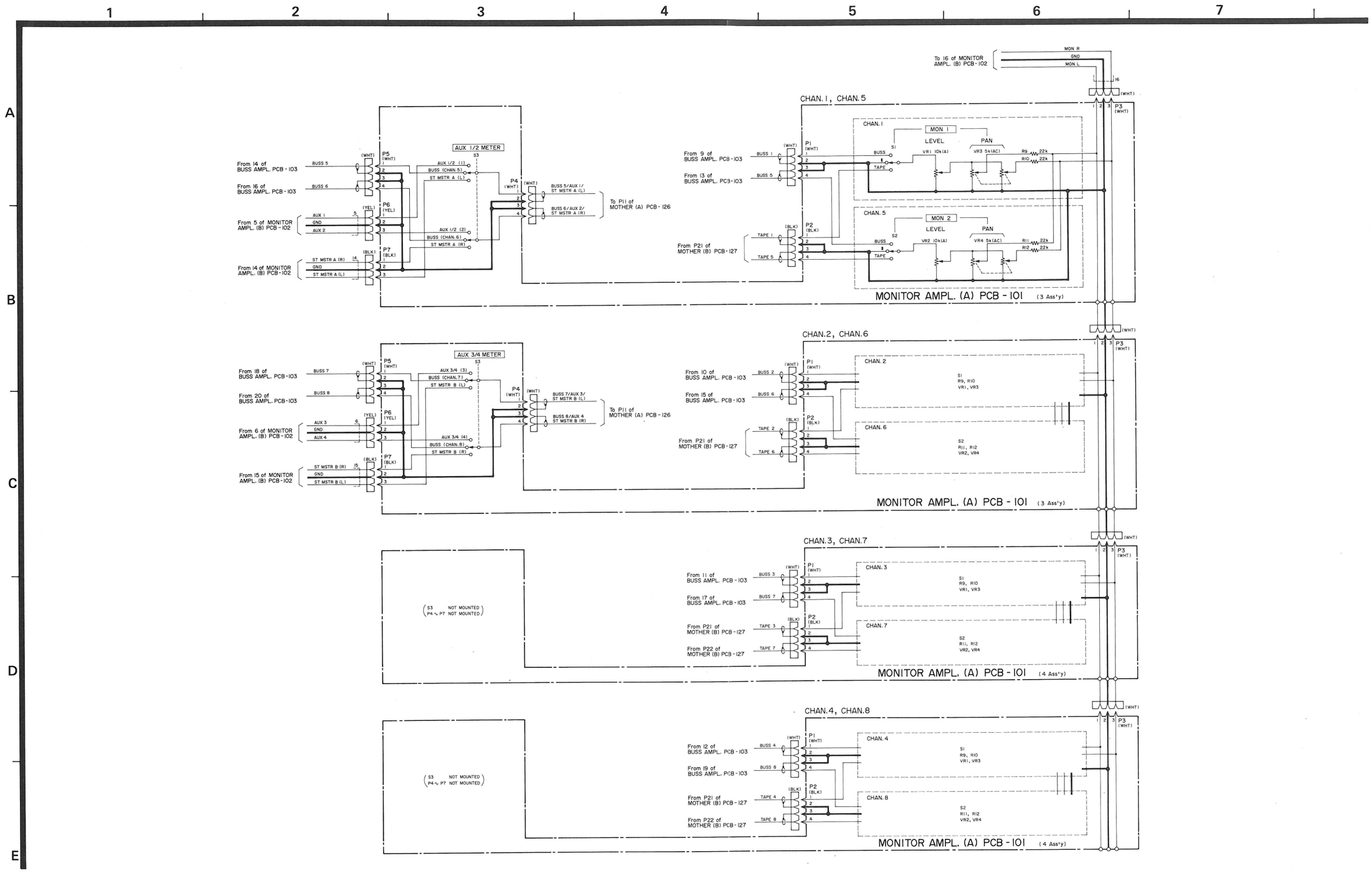

4-12. Monitor (A) PCB [M-520]

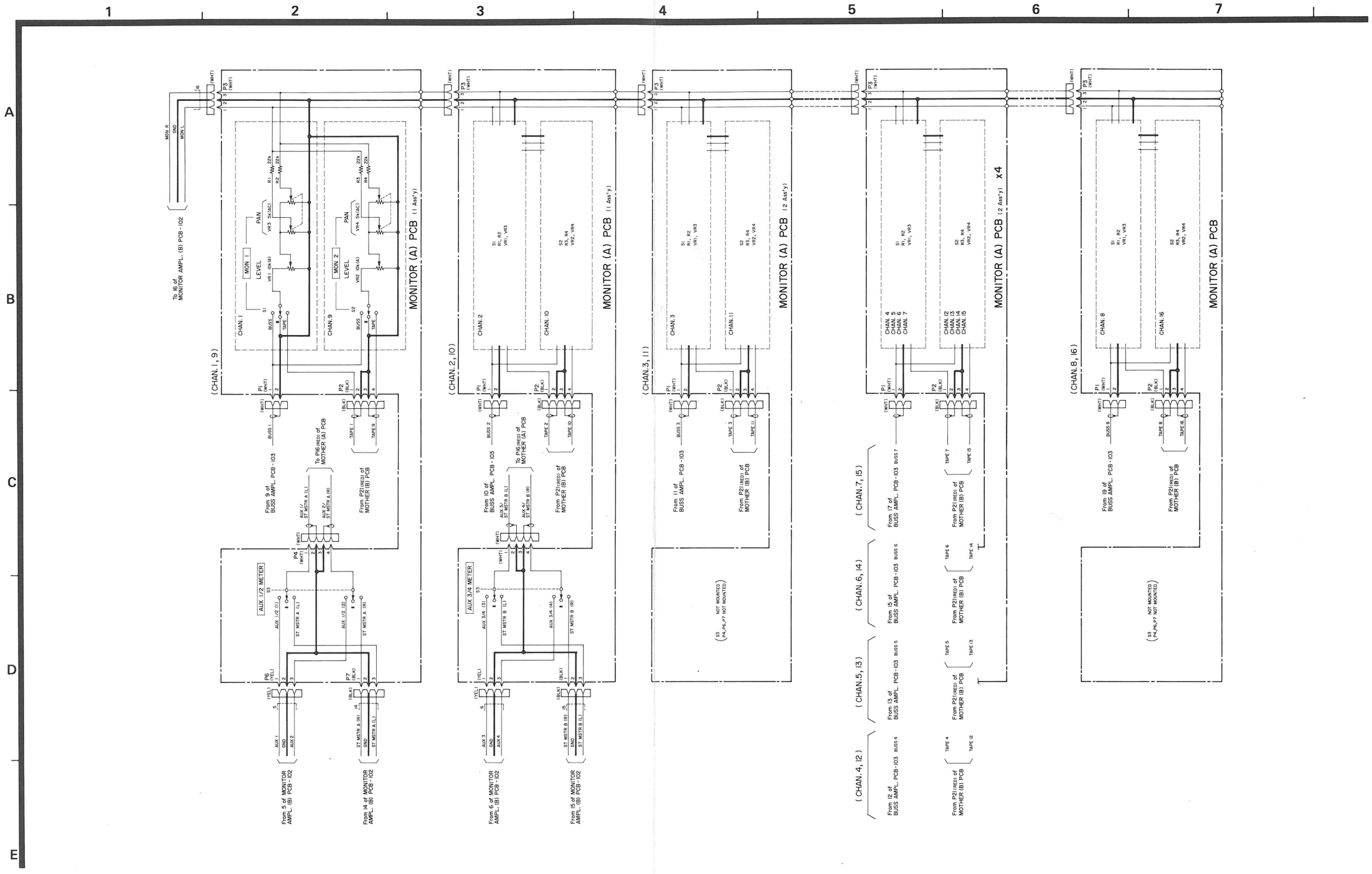

4-13. Buss Ampl. PCB

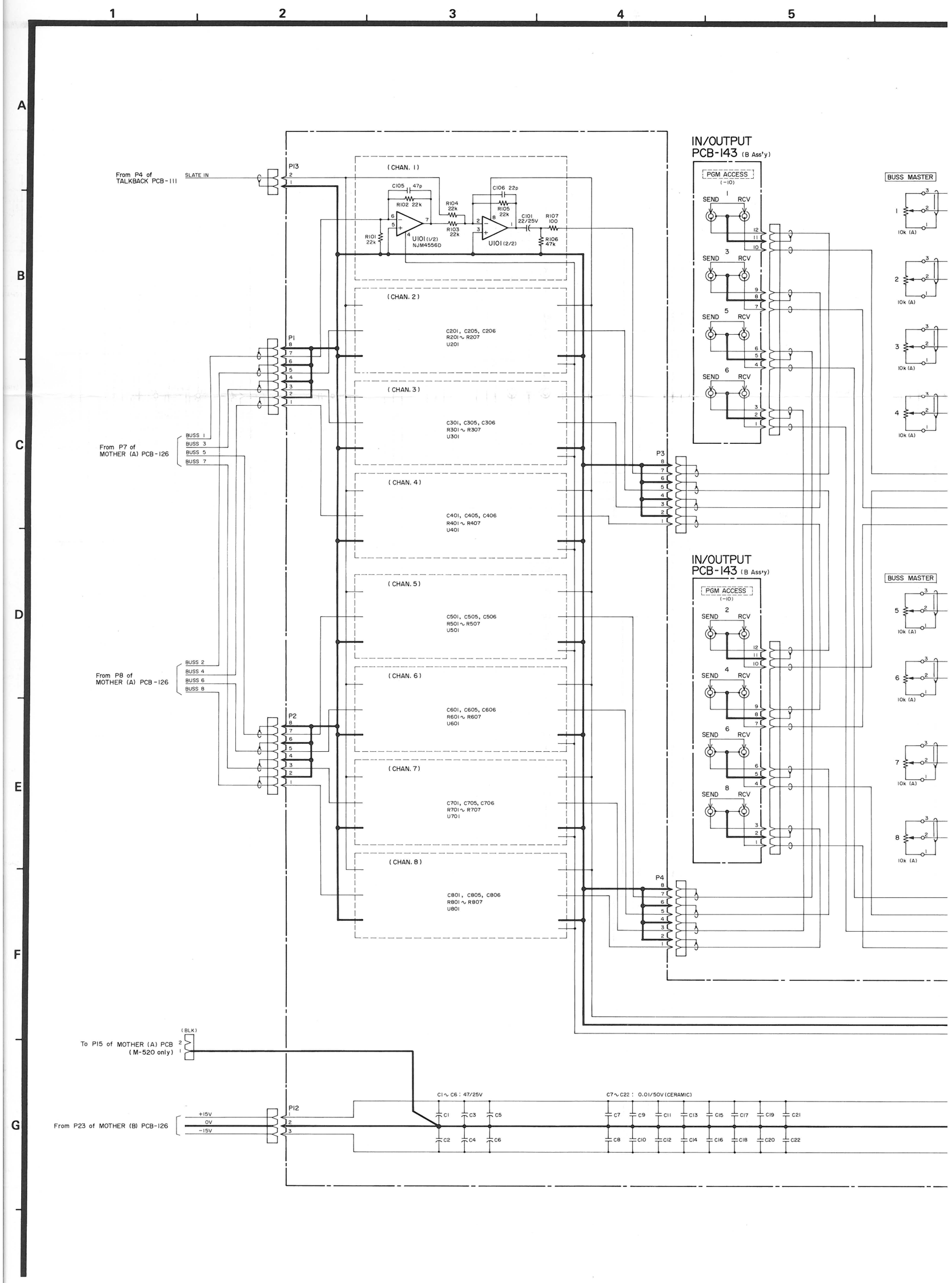

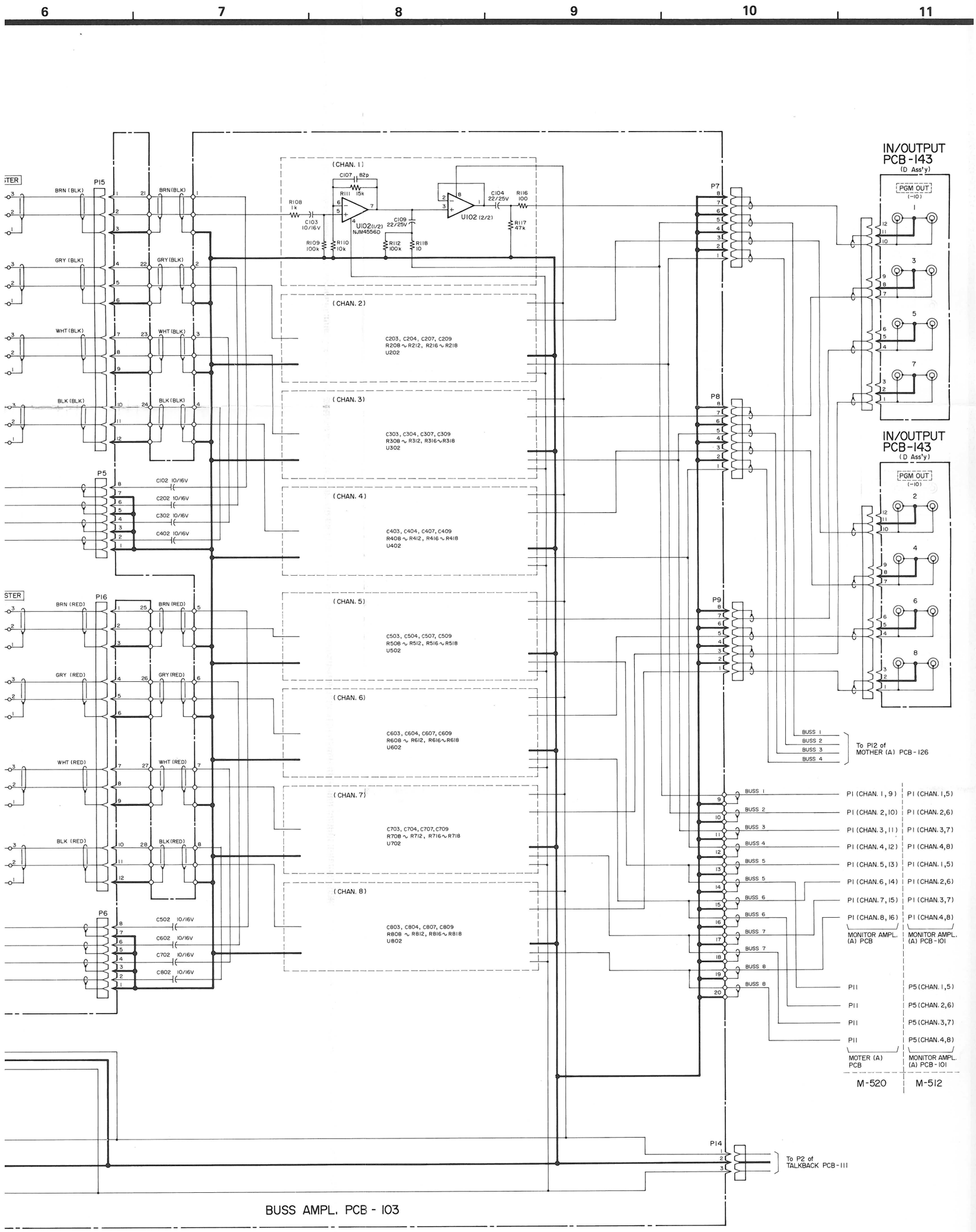
6
7
8
9
10
11
IN/OUTPUT PCB-143
(D Ass'y)
PGM OUT (-10)
IN/OUTPUT PCB-143
(D Ass'y)
PGM OUT (-10)
P15
P16
P5
P6
P7
P8
P9
P14
BRN (BLK)
GRY (BLK)
WHT (BLK)
BLK (BLK)
BRN (RED)
GRY (RED)
WHT (RED)
BLK (RED)
C102 10/16V
C202 10/16V
C302 10/16V
C402 10/16V
C502 10/16V
C602 10/16V
C702 10/16V
C802 10/16V
(CHAN. 1)
C107 82p
R111 15k
R108 1k
C103 10/16V
U102(1/2) NJM4556D
C109 22/25V
R109 100k
R110 10k
R112 100k
R118 10
U102 (2/2)
C104 22/25V
R116 100
R117 47k
(CHAN. 2)
C203, C204, C207, C209
R208 ∿ R212, R216 ∿ R218
U202
(CHAN. 3)
C303, C304, C307, C309
R308 ∿ R312, R316 ∿ R318
U302
(CHAN. 4)
C403, C404, C407, C409
R408 ∿ R412, R416 ∿ R418
U402
(CHAN. 5)
C503, C504, C507, C509
R508 ∿ R512, R516 ∿ R518
U502
(CHAN. 6)
C603, C604, C607, C609
R608 ∿ R612, R616 ∿ R618
U602
(CHAN. 7)
C703, C704, C707, C709
R708 ∿ R712, R716 ∿ R718
U702
(CHAN. 8)
C803, C804, C807, C809
R808 ∿ R812, R816 ∿ R818
U802
BUSS 1
BUSS 2
BUSS 3
BUSS 4
To P12 of MOTHER (A) PCB-126
BUSS 1
BUSS 2
BUSS 3
BUSS 4
BUSS 5
BUSS 5
BUSS 6
BUSS 6
BUSS 7
BUSS 7
BUSS 8
BUSS 8
P1 (CHAN. 1, 9)
P1 (CHAN. 2, 10)
P1 (CHAN. 3, 11)
P1 (CHAN. 4, 12)
P1 (CHAN. 5, 13)
P1 (CHAN. 6, 14)
P1 (CHAN. 7, 15)
P1 (CHAN. 8, 16)
P1 (CHAN. 1, 5)
P1 (CHAN. 2, 6)
P1 (CHAN. 3, 7)
P1 (CHAN. 4, 8)
P1 (CHAN. 1, 5)
P1 (CHAN. 2, 6)
P1 (CHAN. 3, 7)
P1 (CHAN. 4, 8)
MONITOR AMPL. (A) PCB
MONITOR AMPL. (A) PCB-101
P11
P11
P11
P11
P5 (CHAN. 1, 5)
P5 (CHAN. 2, 6)
P5 (CHAN. 3, 7)
P5 (CHAN. 4, 8)
MOTER (A) PCB
MONITOR AMPL. (A) PCB-101
M-520
M-512
To P2 of TALKBACK PCB-111
BUSS AMPL. PCB - 103

4-14. Monitor Ampl. (B) PCB

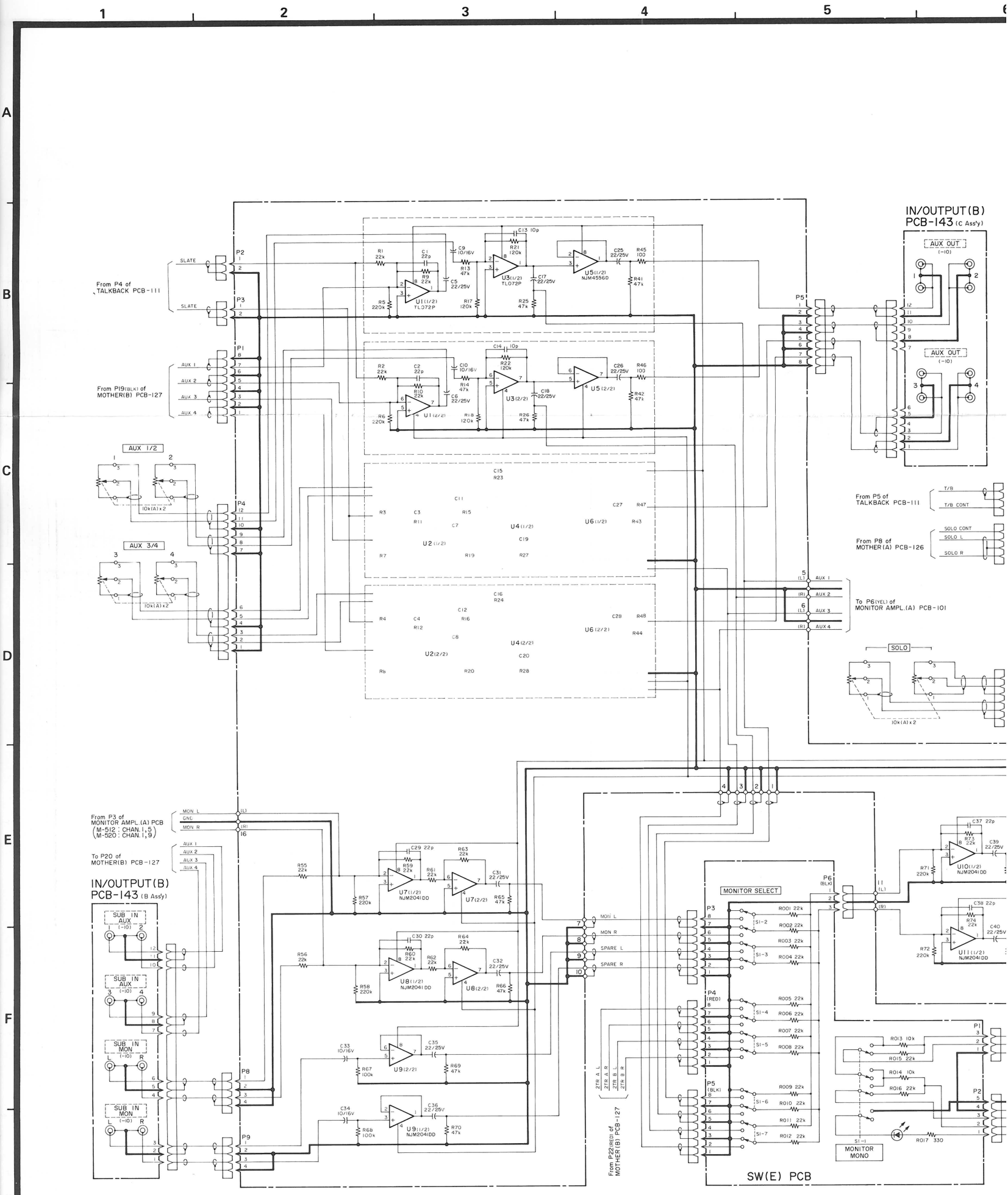

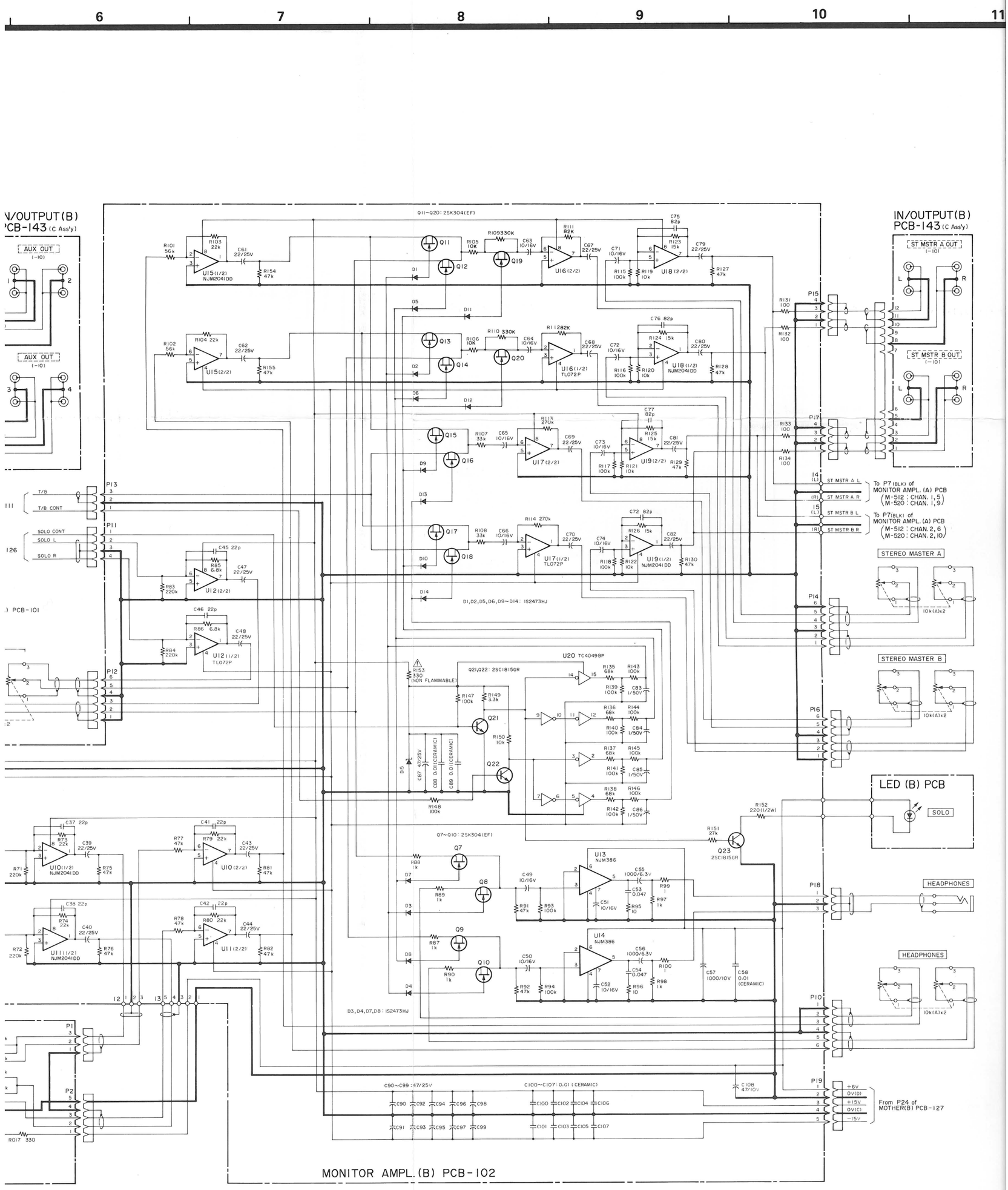
6
7
8
9
10
11
IN/OUTPUT(B) PCB-143 (C Ass'y)
AUX OUT (-10)
ST MSTR A OUT (-10)
ST MSTR B OUT (-10)
Q11~Q20: 2SK304(EF)
U15(1/2) NJM2041DD
U16(2/2)
U18(2/2)
U15(2/2)
U16(1/2) TL072P
U18(1/2) NJM2041DD
U17(2/2)
U19(2/2)
U17(1/2) TL072P
U19(1/2) NJM2041DD
D1,D2,D5,D6,D9~D14: 1S2473HJ
To P7(BLK) of MONITOR AMPL.(A) PCB (M-512 : CHAN. 1,5 / M-520 : CHAN. 1,9)
To P7(BLK) of MONITOR AMPL.(A) PCB (M-512 : CHAN. 2,6 / M-520 : CHAN. 2,10)
ST MSTR A L
ST MSTR A R
ST MSTR B L
ST MSTR B R
STEREO MASTER A
STEREO MASTER B
10k(A)x2
LED (B) PCB
SOLO
HEADPHONES
T/B
T/B CONT
SOLO CONT
SOLO L
SOLO R
PCB-101
U12(2/2)
U12(1/2) TL072P
U20 TC4049BP
Q21,Q22: 2SC1815GR
R153 330 (NON FLAMMABLE)
Q7~Q10: 2SK304(EF)
U13 NJM386
U14 NJM386
D3,D4,D7,D8: 1S2473HJ
Q23 2SC1815GR
U10(1/2) NJM2041DD
U10(2/2)
U11(1/2) NJM2041DD
U11(2/2)
C90~C99: 47/25V
C100~C107: 0.01 (CERAMIC)
C108 47/10V
+6V
0V(D)
+15V
0V(C)
-15V
From P24 of MOTHER(B) PCB-127
MONITOR AMPL.(B) PCB-102

4-15. Input Ampl. (A/B/C/D/E/F/G) PCB

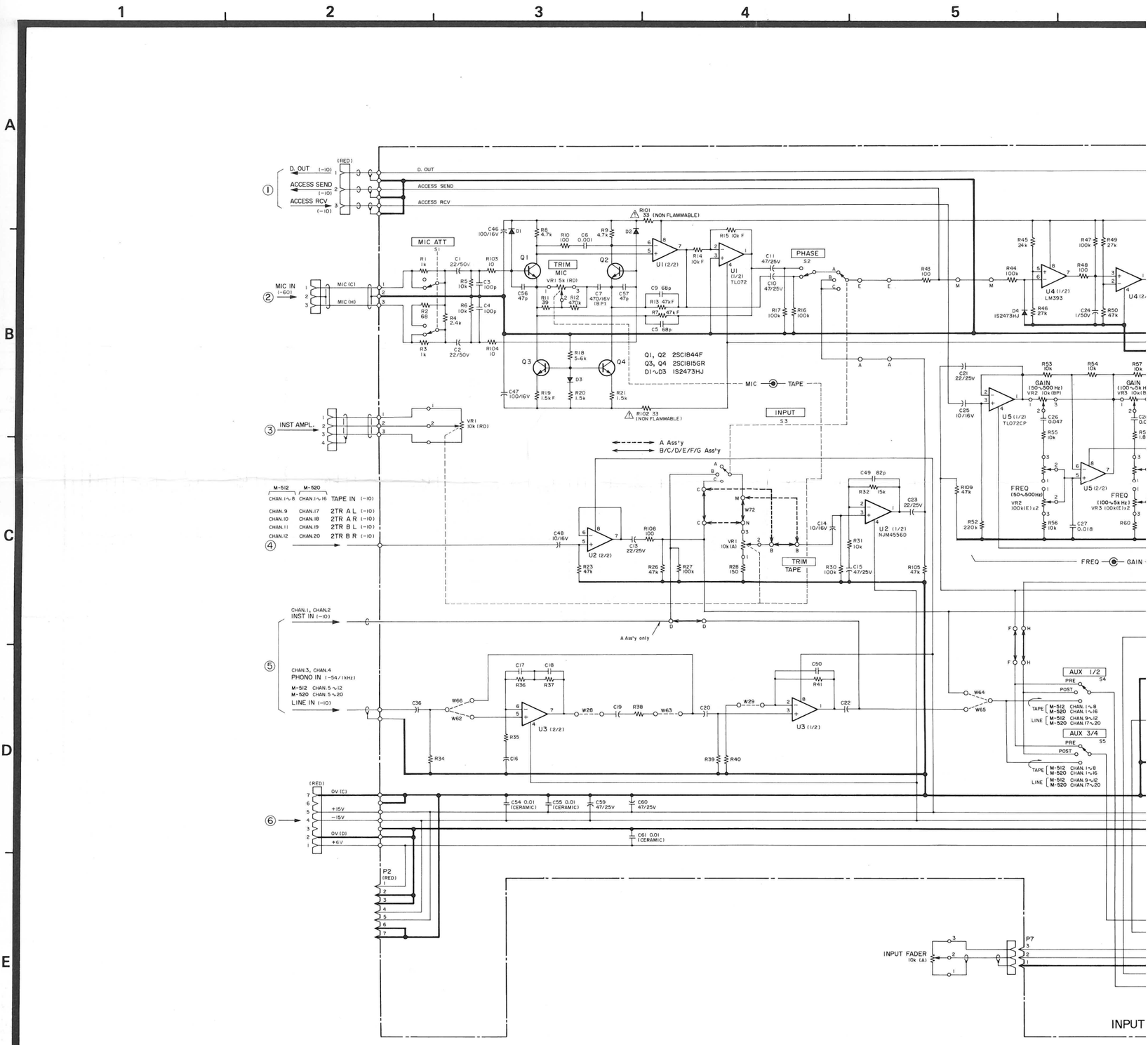

PCB Ass'y	CHANNEL M-512	CHANNEL M-520	INPUT S_3 A	INPUT S_3 B	INPUT S_3 C	POSITION	Ref. No. U3	VR1	R34	R35	R36	R37	R38	R39	R40	R41	C16	C17	C18	C19	C20	C22	C36	C50	W28	W29	W62	W63	W64	W65	W66	W69	W70	W71	W72
A	1, 2	1, 2	MIC	INST		TAPE	Not mounted	5k(RD) + 10k(RD) + 10k(A)	Not mounted																Open						Open	Open			
B	3	3		PHONO			NJM2041DD	5k(RD) + 10k(A)	47k	4.7k	47k	560k	1k	100k	1k	10k	100/16V	0.0015 (J)	0.0047 (J)	22/25V	10/16V	22/25V	10/16V	82p	Shorting				Short-ing	Open	Open	Shorting				
C	4	4																																	
D	5, 6, 7	5, 6, 7 9, 10, 11 13, 14, 15	MIC	LINE					Not mounted						Not mount-ed	0 Ω (Short-ing)	Not mounted						0 Ω (Short-ing)	Not mount-ed	Open						Short-ing				
E	8	8, 12, 16																																	
F	9	17	MIC	LINE	2TR A L																								Open	Short-ing					
	10	18			2TR A R																														
	11	19			2TR B L																														
G	12	20			2TR B R																														

CONNE

MODE
M-512
M-512
M-512
M-512
M-512
M-512
M-

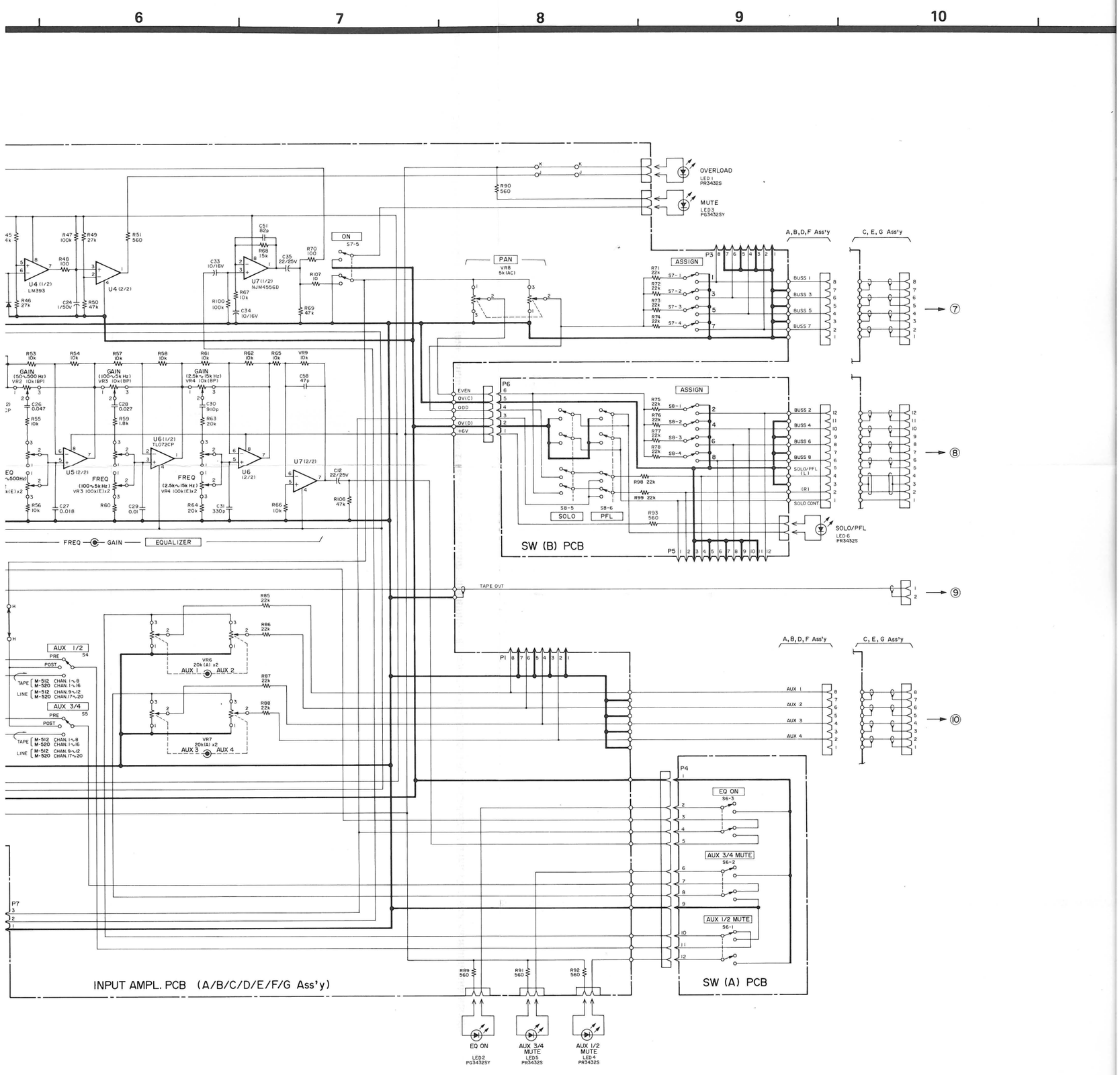

CONNECTIONS

MODEL		CHANNEL	①	②	③	④	⑤	⑥	⑦	⑧	⑨	⑩	CHANNEL	MODEL	
M-512	M-520	1	IN/OUTPUT (A) PCB P4 of CH.1	IN/OUTPUT (A) PCB P2 of CH.1	MOTHER (B) PCB P34	IN/OUTPUT (A) PCB P3 of CH.1	MOTHER (B) PCB P31	INPUT AMPL. PCB P2 of CH.2	INPUT AMPL. PCB P3 of CH.2	SW (B) PCB P5 of CH.2	MOTHER (B) PCB P1	INPUT AMPL. PCB P1 of CH.2	1	M-520	M-512
		2	IN/OUTPUT (A) PCB P4 of CH.2	IN/OUTPUT (A) PCB P2 of CH.2	MOTHER (B) PCB P35	IN/OUTPUT (A) PCB P3 of CH.2	MOTHER (B) PCB P33	INPUT AMPL. PCB P2 of CH.3	INPUT AMPL. PCB P3 of CH.3	SW (B) PCB P5 of CH.3	MOTHER (B) PCB P2	INPUT AMPL. PCB P1 of CH.3	2		
		3	IN/OUTPUT (A) PCB P4 of CH.3	IN/OUTPUT (A) PCB P2 of CH.3		IN/OUTPUT (A) PCB P1 of CH.3		INPUT AMPL. PCB P2 of CH.4	INPUT AMPL. PCB P3 of CH.4	SW (B) PCB P5 of CH.4	MOTHER (B) PCB P3	INPUT AMPL. PCB P1 of CH.4	3		
	M-520	4	IN/OUTPUT (A) PCB P4 of CH.4	IN/OUTPUT (A) PCB P2 of CH.4		IN/OUTPUT (A) PCB P1 of CH.4		MOTHER (B) PCB P13	MOTHER (A) PCB P1	MOTHER (A) PCB P2	MOTHER (B) PCB P4	MOTHER (B) PCB P14	4	M-520	M-512
								MOTHER (B) PCB P36	MOTHER (A) PCB P18	MOTHER (A) PCB P19	MOTHER (B) PCB P4	MOTHER (B) PCB P37			
M-512	M-520	5	IN/OUTPUT (A) PCB P4 of CH.5	IN/OUTPUT (A) PCB P2 of CH.5		IN/OUTPUT (A) PCB P1 of CH.5		INPUT AMPL. PCB P2 of CH.6	INPUT AMPL. PCB P3 of CH.6	SW (B) PCB P5 of CH.6	MOTHER (B) PCB P5	INPUT AMPL. PCB P1 of CH.6	5		
		6	IN/OUTPUT (A) PCB P4 of CH.6	IN/OUTPUT (A) PCB P2 of CH.6		IN/OUTPUT (A) PCB P1 of CH.6		INPUT AMPL. PCB P2 of CH.7	INPUT AMPL. PCB P3 of CH.7	SW (B) PCB P5 of CH.7	MOTHER (B) PCB P6	INPUT AMPL. PCB P1 of CH.7	6		
		7	IN/OUTPUT (A) PCB P4 of CH.7	IN/OUTPUT (A) PCB P2 of CH.7		IN/OUTPUT (A) PCB P1 of CH.7		INPUT AMPL. PCB P2 of CH.8	INPUT AMPL. PCB P3 of CH.8	SW (B) PCB P5 of CH.8	MOTHER (B) PCB P7	INPUT AMPL. PCB P1 of CH.8	7		
	M-520	8	IN/OUTPUT (A) PCB P4 of CH.8	IN/OUTPUT (A) PCB P2 of CH.8		IN/OUTPUT (A) PCB P1 of CH.8		MOTHER (B) PCB P15	MOTHER (A) PCB P3	MOTHER (A) PCB P4	MOTHER (B) PCB P8	MOTHER (B) PCB P16	8		
								MOTHER (B) PCB P38	MOTHER (A) P20	MOTHER (A) PCB P21	MOTHER (B) PCB P8	MOTHER (B) PCB P39		M-520	
M-512		9	IN/OUTPUT (A) PCB P4 of CH.9	IN/OUTPUT (A) PCB P2 of CH.9		IN/OUTPUT (A) PCB P1 of CH.9		INPUT AMPL. PCB P2 of CH.10	INPUT AMPL. PCB P3 of CH.10	SW (B) PCB P5 of CH.10	MOTHER (B) PCB P9	INPUT AMPL. PCB P1 of CH.10	9	M-512	
	M-520										MOTHER (B) PCB P40			M-520	
M-512		10	IN/OUTPUT (A) PCB P4 of CH.10	IN/OUTPUT (A) PCB P2 of CH.10		IN/OUTPUT (A) PCB P1 of CH.10		INPUT AMPL. PCB P2 of CH.11	INPUT AMPL. PCB P3 of CH.11	SW (B) PCB P5 of CH.11	MOTHER (B) PCB P10	INPUT AMPL. PCB P1 of CH.11	10	M-512	
	M-520										MOTHER (B) PCB P41			M-520	
M-512		11	IN/OUTPUT (A) PCB P4 of CH.11	IN/OUTPUT (A) PCB P2 of CH.11		IN/OUTPUT (A) PCB P1 of CH.11		INPUT AMPL. PCB P2 of CH.12	INPUT AMPL. PCB P3 of CH.12	SW (B) PCB P5 of CH.12	MOTHER (B) PCB P11	INPUT AMPL. PCB P1 of CH.12	11	M-512	
	M-520										MOTHER (B) PCB P42			M-520	
M-512		12	IN/OUTPUT (A) PCB P4 of CH.12	IN/OUTPUT (A) PCB P2 of CH.12		IN/OUTPUT (A) PCB P1 of CH.12		MOTHER (B) PCB P17	MOTHER (A) PCB P5	MOTHER (A) PCB P6	MOTHER (B) PCB P12	MOTHER (B) PCB P18	12	M-512	
								MOTHER (B) PCB P13	MOTHER (A) PCB P1	MOTHER (A) PCB P2	MOTHER (B) PCB P43	MOTHER (B) PCB P14			
M-520		13	IN/OUTPUT (A) PCB P4 of CH.13	IN/OUTPUT (A) PCB P2 of CH.13		IN/OUTPUT (A) PCB P1 of CH.13		INPUT AMPL. PCB P2 of CH.14	INPUT AMPL. PCB P3 of CH.14	SW (B) PCB P5 of CH.14	MOTHER (B) PCB P44	INPUT AMPL. PCB P1 of CH.14	13	M-520	
		14	IN/OUTPUT (A) PCB P4 of CH.14	IN/OUTPUT (A) PCB P2 of CH.14		IN/OUTPUT (A) PCB P1 of CH.14		INPUT AMPL. PCB P2 of CH.15	INPUT AMPL. PCB P3 of CH.15	SW (B) PCB P5 of CH.15	MOTHER (B) PCB P45	INPUT AMPL. PCB P1 of CH.15	14		
		15	IN/OUTPUT (A) PCB P4 of CH.15	IN/OUTPUT (A) PCB P2 of CH.15		IN/OUTPUT (A) PCB P1 of CH.15		INPUT AMPL. PCB P2 of CH.16	INPUT AMPL. PCB P3 of CH.16	SW (B) PCB P5 of CH.16	MOTHER (B) PCB P46	INPUT AMPL. PCB P1 of CH.16	15		
		16	IN/OUTPUT (A) PCB P4 of CH.16	IN/OUTPUT (A) PCB P2 of CH.16		IN/OUTPUT (A) PCB P1 of CH.16		MOTHER (B) PCB P15	MOTHER (A) PCB P3	MOTHER (A) PCB P4	MOTHER (B) PCB P47	MOTHER (B) PCB P16	16		
		17	IN/OUTPUT (A) PCB P4 of CH.17	IN/OUTPUT (A) PCB P2 of CH.17		IN/OUTPUT (A) PCB P1 of CH.17		INPUT AMPL. PCB P2 of CH.18	INPUT AMPL. PCB P3 of CH.18	SW (B) PCB P5 of CH.18	MOTHER (B) PCB P9	INPUT AMPL. PCB P1 of CH.18	17		
		18	IN/OUTPUT (A) PCB P4 of CH.18	IN/OUTPUT (A) PCB P2 of CH.18		IN/OUTPUT (A) PCB P1 of CH.18		INPUT AMPL. PCB P2 of CH.19	INPUT AMPL. PCB P3 of CH.19	SW (B) PCB P5 of CH.19	MOTHER (B) PCB P10	INPUT AMPL. PCB P1 of CH.19	18		
		19	IN/OUTPUT (A) PCB P4 of CH.19	IN/OUTPUT (A) PCB P2 of CH.19		IN/OUTPUT (A) PCB P1 of CH.19		INPUT AMPL. PCB P2 of CH.20	INPUT AMPL. PCB P3 of CH.20	SW (B) PCB P5 of CH.20	MOTHER (B) PCB P11	INPUT AMPL. PCB P1 of CH.20	19		
		20	IN/OUTPUT (A) PCB P4 of CH.20	IN/OUTPUT (A) PCB P2 of CH.20		IN/OUTPUT (A) PCB P1 of CH.20		MOTHER (B) PCB P17	MOTHER (A) PCB P5	MOTHER (A) PCB P6	MOTHER (B) PCB P12	MOTHER (B) PCB P18	20		

4-16. Wiring Diagram-1 [M-512]

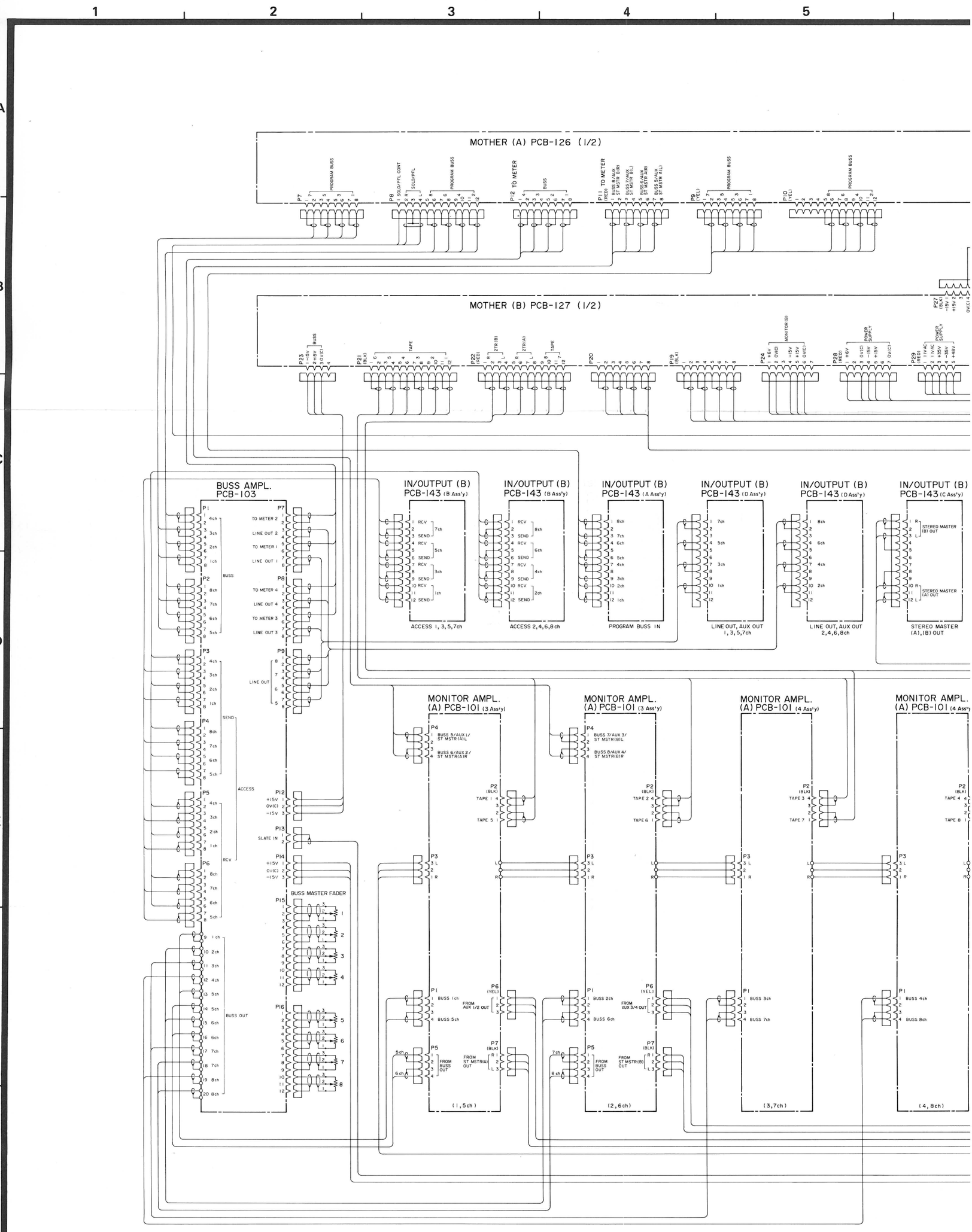

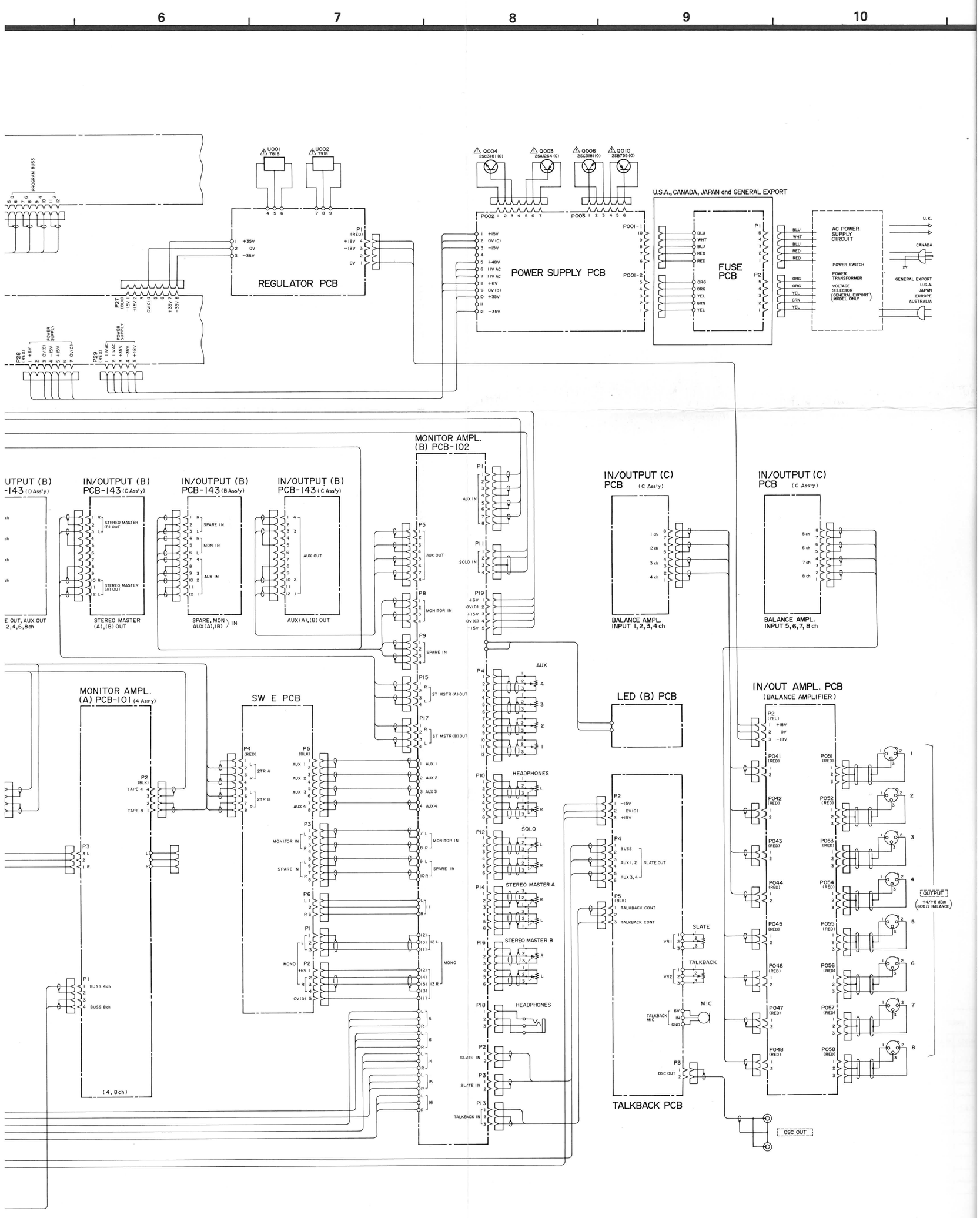
6
7
8
9
10
PROGRAM BUSS
U001 7818
U002 7918
Q004 2SC3181 (O)
Q003 2SA1264 (O)
Q006 2SC3181 (O)
Q010 2SB755 (O)
U.S.A., CANADA, JAPAN and GENERAL EXPORT
REGULATOR PCB
POWER SUPPLY PCB
FUSE PCB
AC POWER SUPPLY CIRCUIT
POWER SWITCH
POWER TRANSFORMER
VOLTAGE SELECTOR (GENERAL EXPORT MODEL ONLY)
U.K.
CANADA
GENERAL EXPORT
U.S.A.
JAPAN
EUROPE
AUSTRALIA
MONITOR AMPL. (B) PCB-102
IN/OUTPUT (B) PCB-143 (C Ass'y)
IN/OUTPUT (B) PCB-143 (B Ass'y)
IN/OUTPUT (B) PCB-143 (C Ass'y)
STEREO MASTER (A),(B) OUT
SPARE, MON AUX(A),(B) IN
AUX(A),(B) OUT
IN/OUTPUT (C) PCB (C Ass'y)
BALANCE AMPL. INPUT 1,2,3,4 ch
BALANCE AMPL. INPUT 5,6,7,8 ch
MONITOR AMPL. (A) PCB-101 (4 Ass'y)
SW E PCB
LED (B) PCB
IN/OUT AMPL. PCB (BALANCE AMPLIFIER)
TALKBACK PCB
OUTPUT (+4/+8 dBm 600Ω BALANCE)
OSC OUT

4-17. Wiring Diagram-2 [M-512]

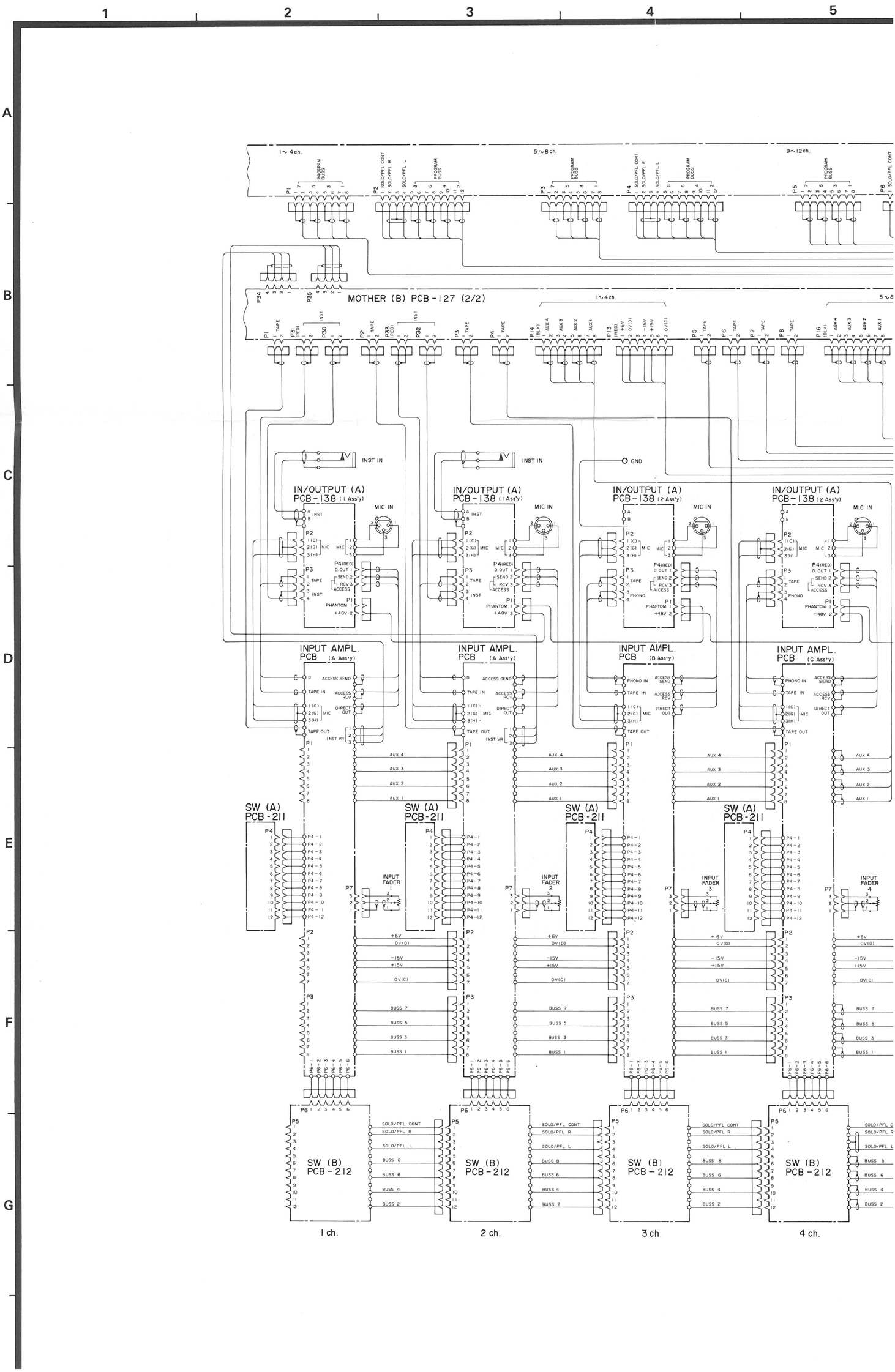

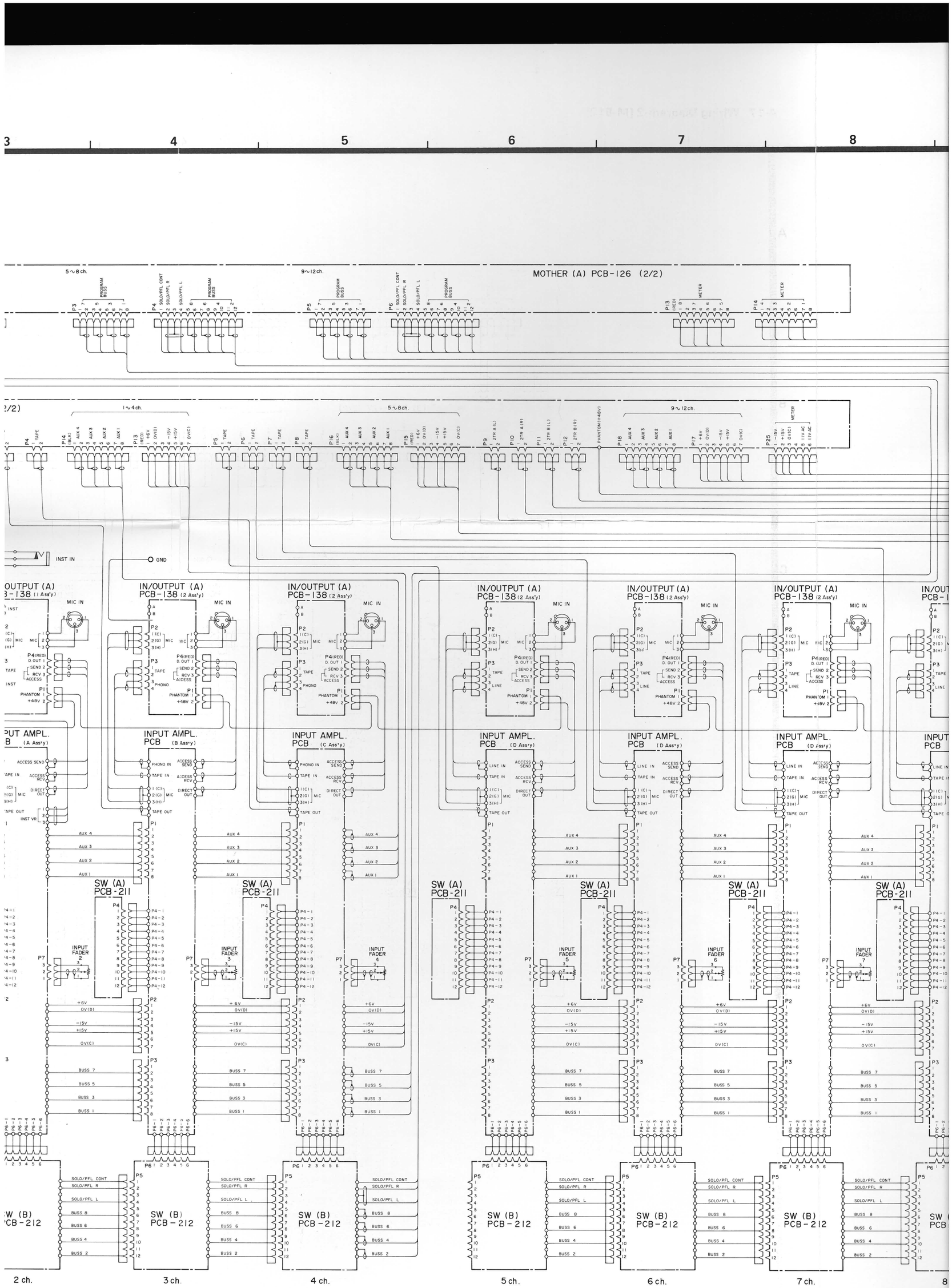
MOTHER (A) PCB-126 (2/2)
IN/OUTPUT (A) PCB-138 (2 Ass'y)
INPUT AMPL. PCB (A Ass'y)
INPUT AMPL. PCB (B Ass'y)
INPUT AMPL. PCB (C Ass'y)
INPUT AMPL. PCB (D Ass'y)
SW (A) PCB-211
SW (B) PCB-212
2 ch.
3 ch.
4 ch.
5 ch.
6 ch.
7 ch.

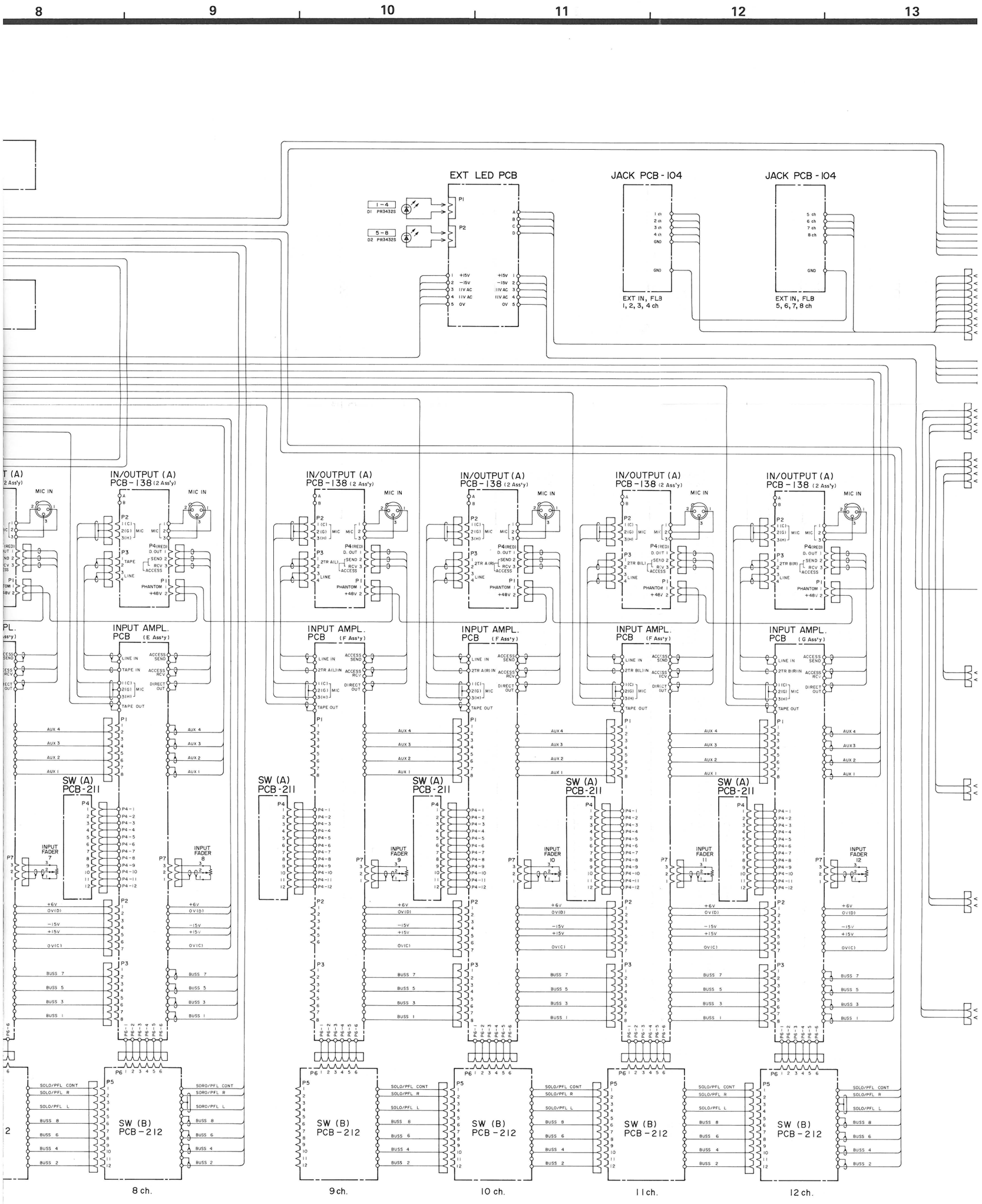
8
9
10
11
12
13
EXT LED PCB
JACK PCB-104
JACK PCB-104
EXT IN, FLB 1, 2, 3, 4 ch
EXT IN, FLB 5, 6, 7, 8 ch
IN/OUTPUT (A) PCB-138 (2 Ass'y)
INPUT AMPL. PCB (E Ass'y)
INPUT AMPL. PCB (F Ass'y)
INPUT AMPL. PCB (G Ass'y)
SW (A) PCB-211
SW (B) PCB-212
8 ch.
9 ch.
10 ch.
11 ch.
12 ch.

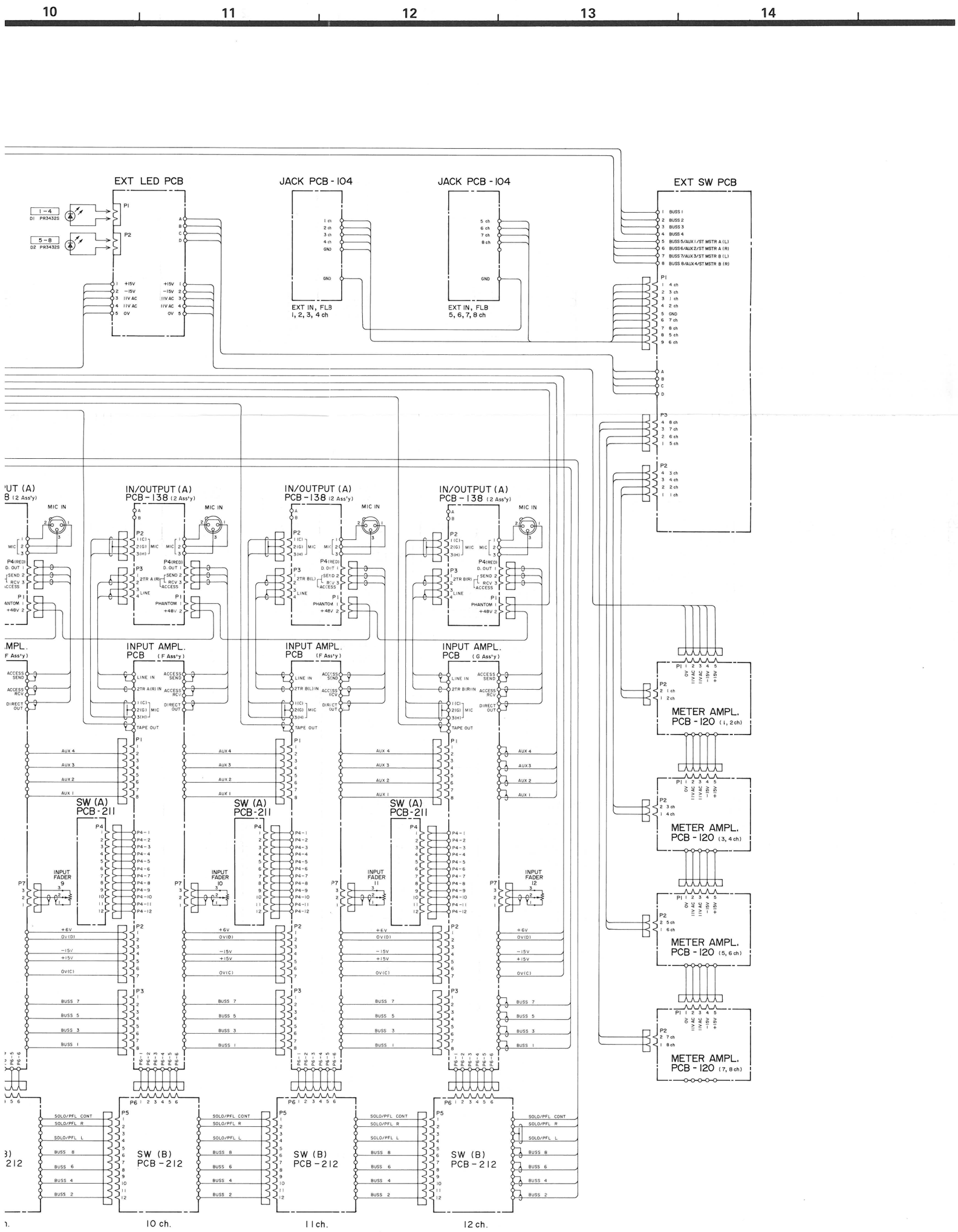
10
11
12
13
14
EXT LED PCB
JACK PCB - 104
JACK PCB - 104
EXT SW PCB
EXT IN, FLB 1, 2, 3, 4 ch
EXT IN, FLB 5, 6, 7, 8 ch
IN/OUTPUT (A) PCB - 138 (2 Ass'y)
INPUT AMPL. PCB (F Ass'y)
INPUT AMPL. PCB (G Ass'y)
SW (A) PCB-211
SW (B) PCB-212
METER AMPL. PCB - 120 (1, 2 ch)
METER AMPL. PCB - 120 (3, 4 ch)
METER AMPL. PCB - 120 (5, 6 ch)
METER AMPL. PCB - 120 (7, 8 ch)
10 ch.
11 ch.
12 ch.

4-18. Wiring Diagram-1 [M-520]

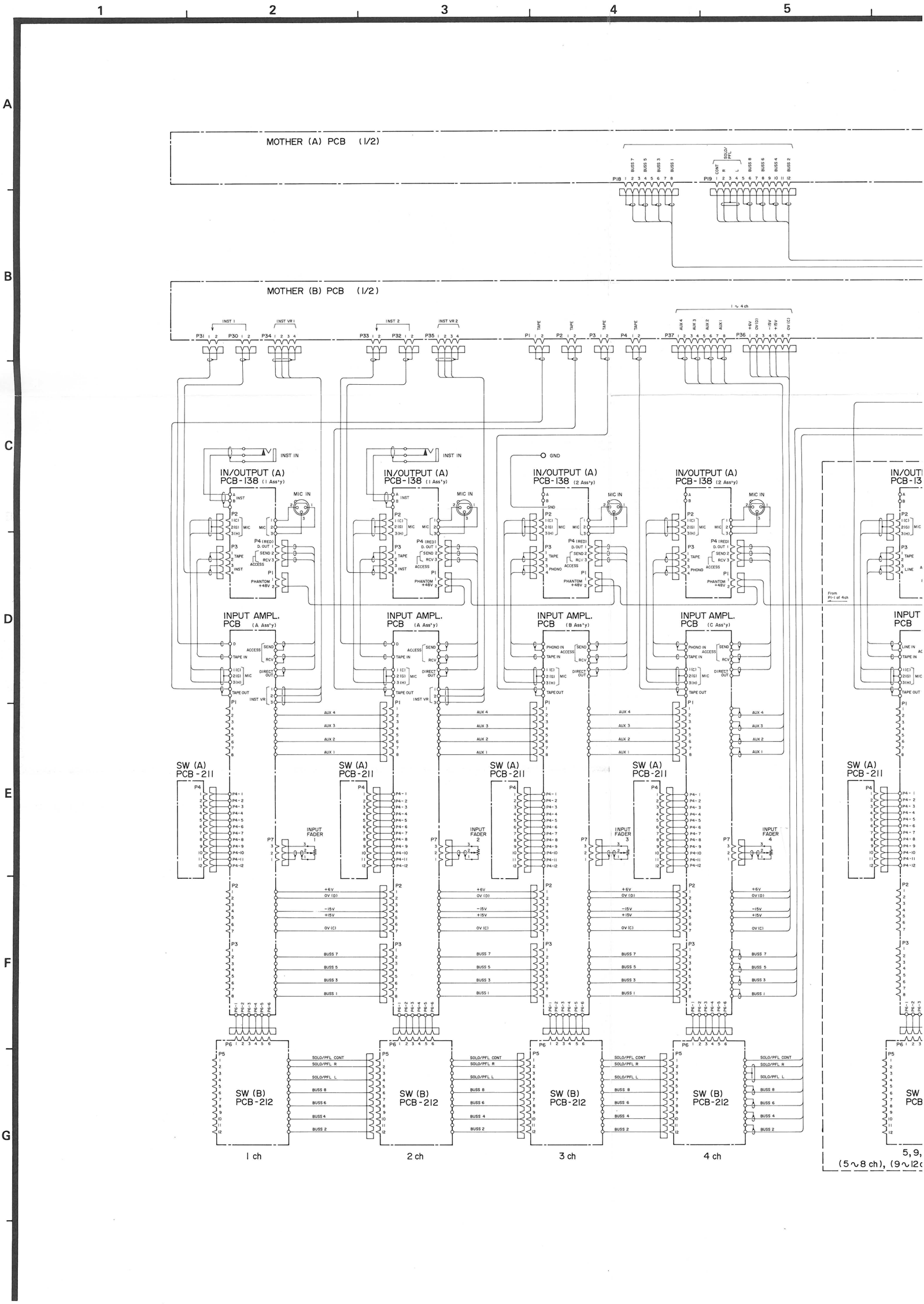

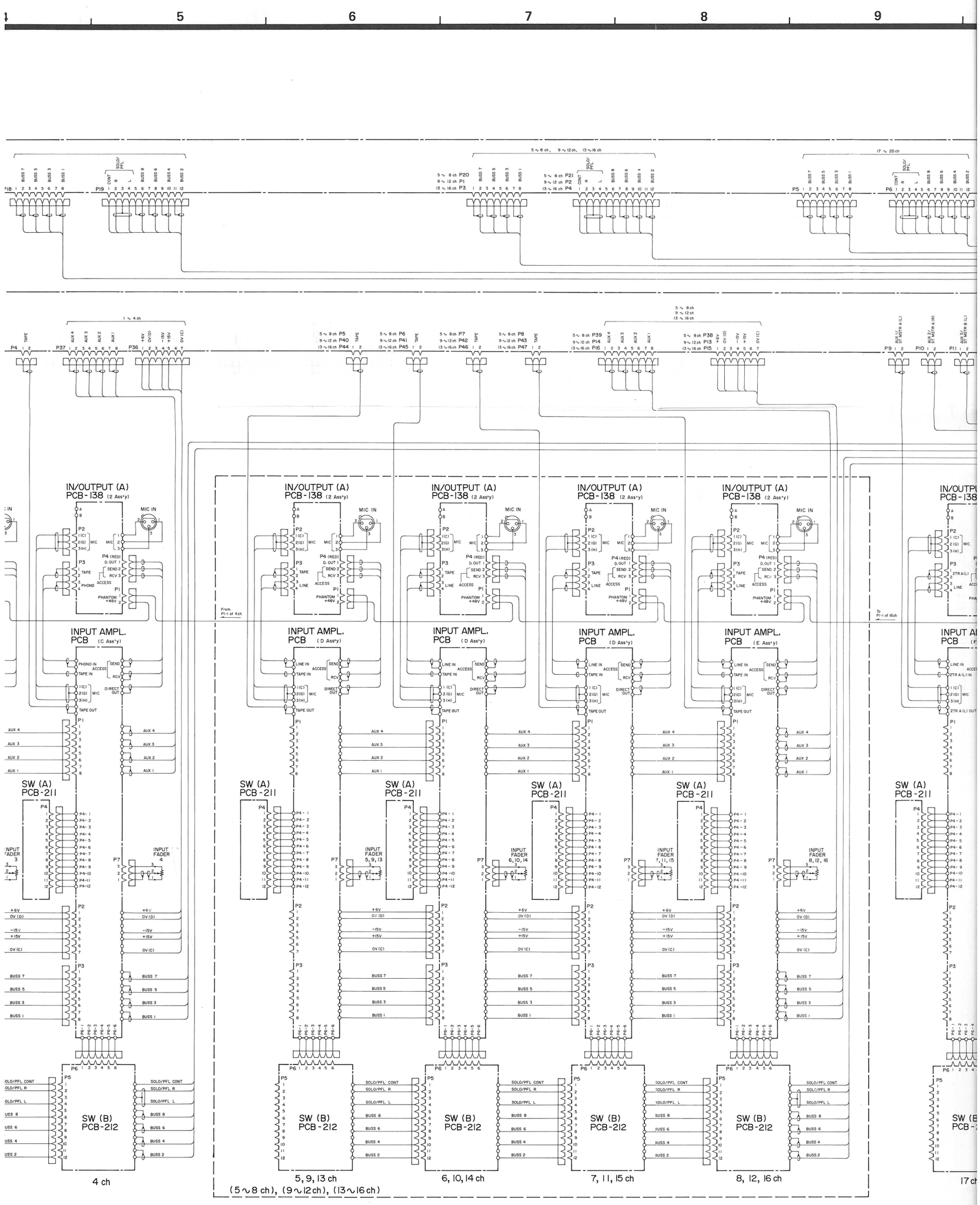
5
6
7
8
9
IN/OUTPUT (A) PCB-138 (2 Ass'y)
INPUT AMPL. PCB (C Ass'y)
INPUT AMPL. PCB (D Ass'y)
INPUT AMPL. PCB (E Ass'y)
SW (A) PCB-211
SW (B) PCB-212
MIC IN
INPUT FADER 3
INPUT FADER 4
INPUT FADER 5, 9, 13
INPUT FADER 6, 10, 14
INPUT FADER 7, 11, 15
INPUT FADER 8, 12, 16
4 ch
5, 9, 13 ch
6, 10, 14 ch
7, 11, 15 ch
8, 12, 16 ch
(5∼8 ch), (9∼12ch), (13∼16ch)

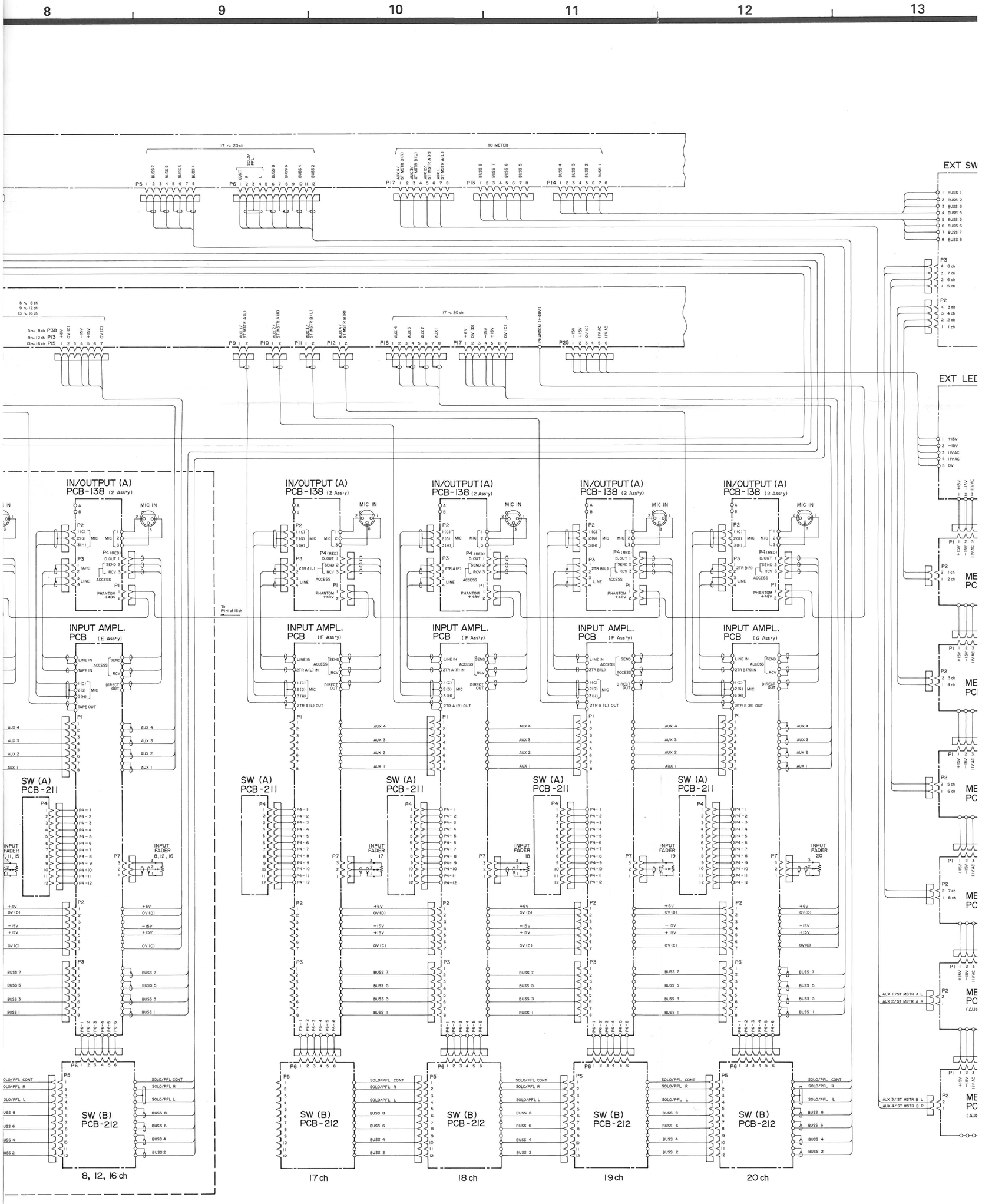
8
9
10
11
12
13
17 ~ 20 ch
TO METER
EXT SW
EXT LED
IN/OUTPUT (A)
PCB-138 (2 Ass'y)
MIC IN
INPUT AMPL.
PCB (E Ass'y)
PCB (F Ass'y)
PCB (G Ass'y)
SW (A)
PCB-211
INPUT FADER 8, 12, 16
INPUT FADER 17
INPUT FADER 18
INPUT FADER 19
INPUT FADER 20
SW (B)
PCB-212
8, 12, 16 ch
17 ch
18 ch
19 ch
20 ch

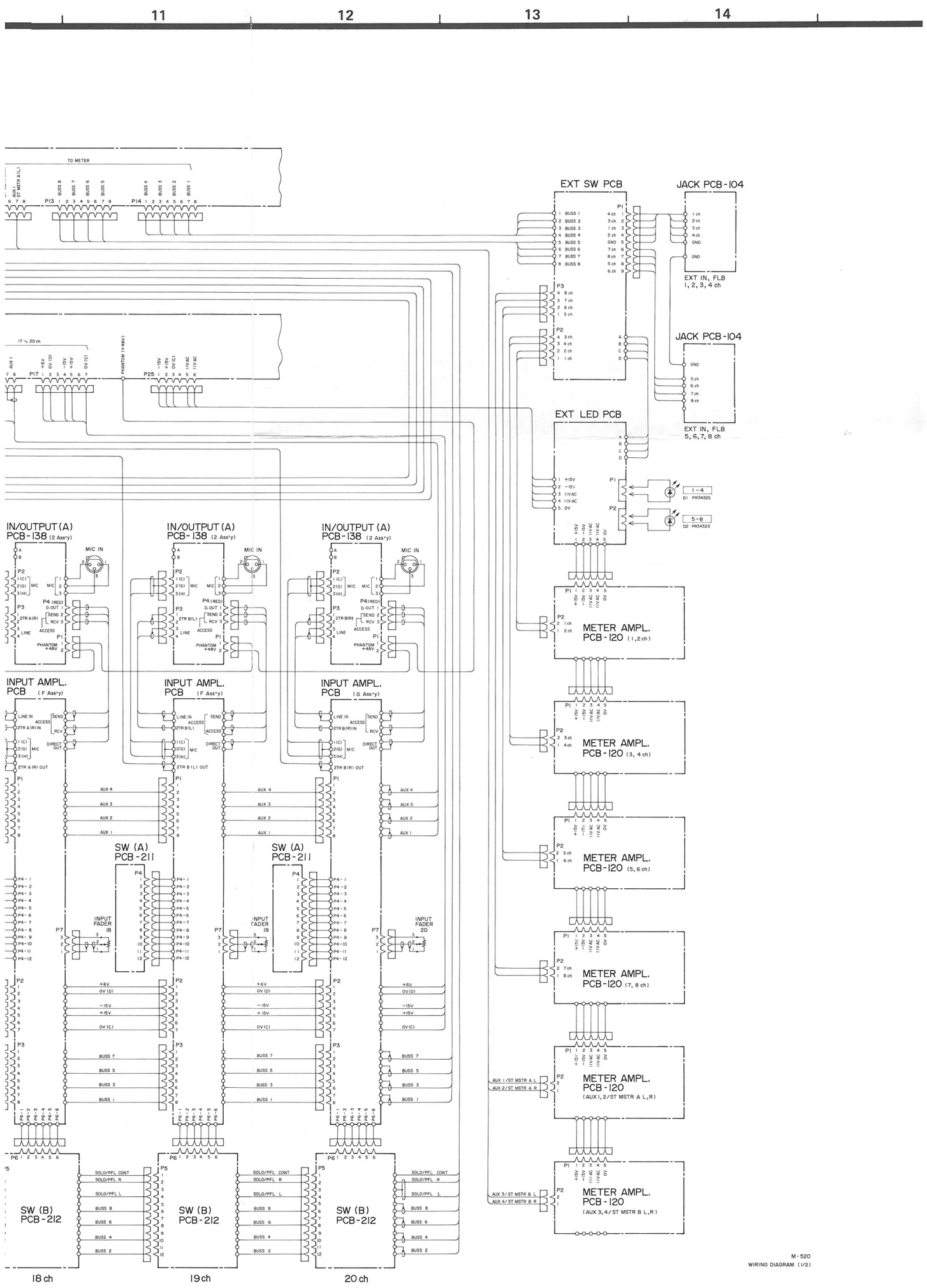

M-520
WIRING DIAGRAM (1/2)

4-19. Wiring Diagram-2 [M-520]

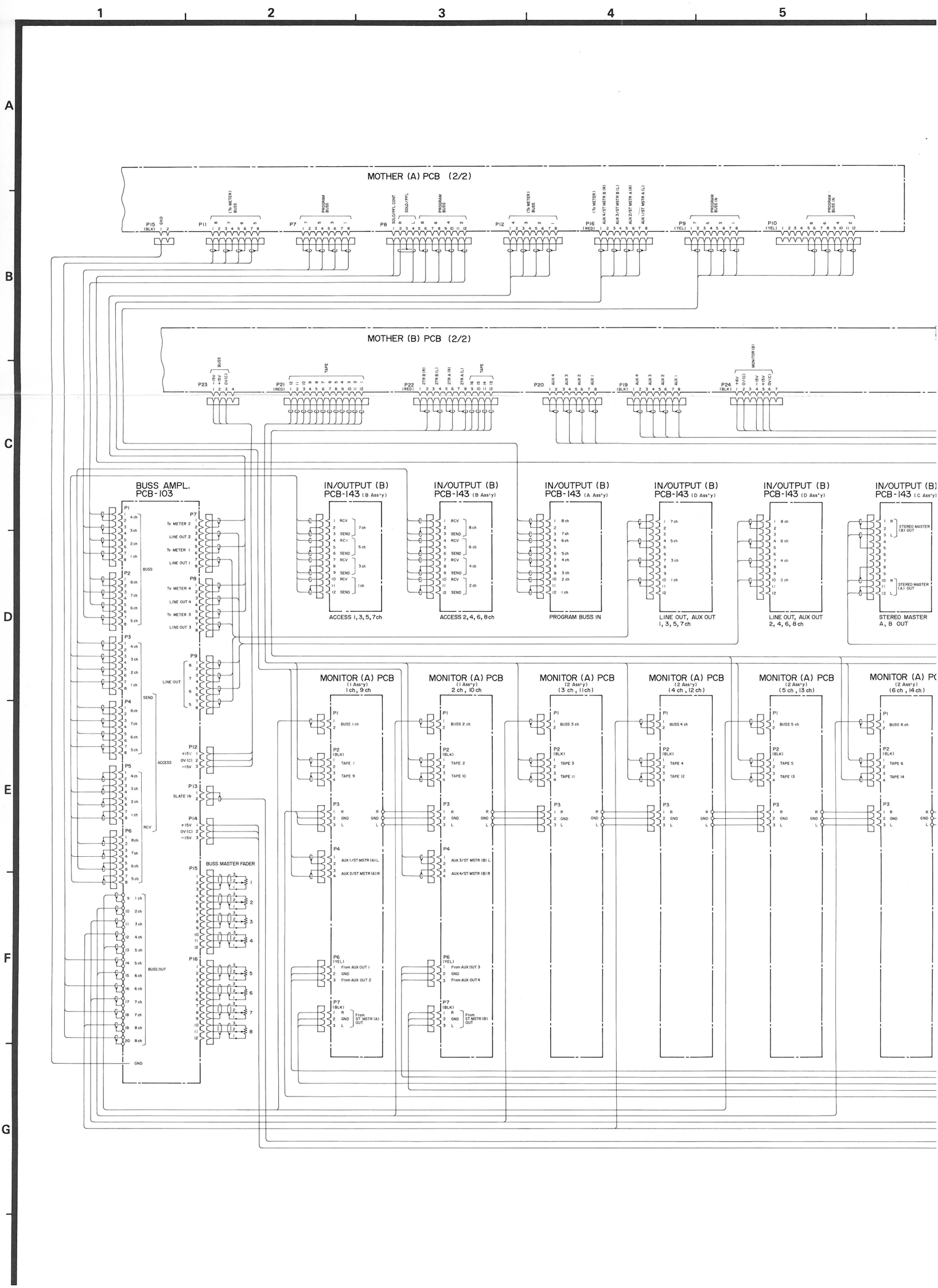

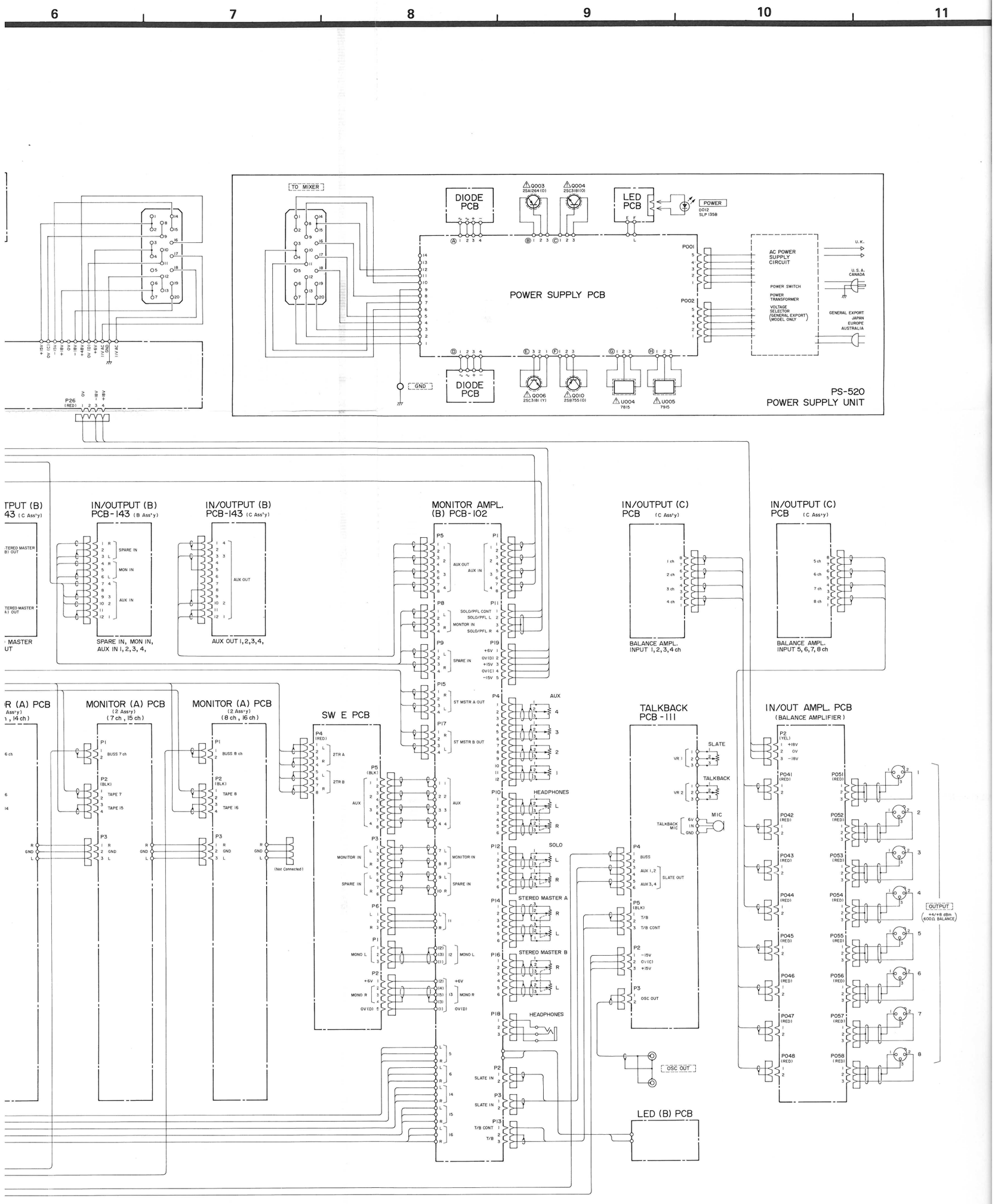
6
7
8
9
10
11
TO MIXER
DIODE PCB
LED PCB
POWER
D012
SLP 1358
Q003
2SA1264 (O)
Q004
2SC3181 (O)
POWER SUPPLY PCB
AC POWER SUPPLY CIRCUIT
POWER SWITCH
POWER TRANSFORMER
VOLTAGE SELECTOR (GENERAL EXPORT MODEL ONLY)
U.K.
U.S.A. CANADA
GENERAL EXPORT JAPAN EUROPE AUSTRALIA
GND
DIODE PCB
Q006
2SC3181 (Y)
Q010
2SB755 (O)
U004
7815
U005
7915
PS-520
POWER SUPPLY UNIT
P26
(RED)
IN/OUTPUT (B)
PCB-143 (B Ass'y)
SPARE IN
MON IN
AUX IN
SPARE IN, MON IN, AUX IN 1, 2, 3, 4,
IN/OUTPUT (B)
PCB-143 (C Ass'y)
AUX OUT
AUX OUT 1, 2, 3, 4,
MONITOR AMPL.
(B) PCB-102
AUX OUT
AUX IN
SOLO/PFL CONT
SOLO/PFL L
MONITOR IN
SOLO/PFL R
SPARE IN
ST MSTR A OUT
ST MSTR B OUT
IN/OUTPUT (C)
PCB (C Ass'y)
BALANCE AMPL.
INPUT 1, 2, 3, 4 ch
IN/OUTPUT (C)
PCB (C Ass'y)
BALANCE AMPL.
INPUT 5, 6, 7, 8 ch
MONITOR (A) PCB
(2 Ass'y)
(7 ch, 15 ch)
BUSS 7 ch
TAPE 7
TAPE 15
MONITOR (A) PCB
(2 Ass'y)
(8 ch, 16 ch)
BUSS 8 ch
TAPE 8
TAPE 16
(Not Connected)
SW E PCB
2TR A
2TR B
AUX
MONITOR IN
SPARE IN
MONO L
MONO R
+6V
0V (D)
HEADPHONES
SOLO
STEREO MASTER A
STEREO MASTER B
SLATE IN
T/B CONT
T/B
TALKBACK
PCB-111
SLATE
TALKBACK
MIC
VR 1
VR 2
BUSS
AUX 1, 2
AUX 3, 4
SLATE OUT
T/B
T/B CONT
-15V
0V (C)
+15V
OSC OUT
LED (B) PCB
IN/OUT AMPL. PCB
(BALANCE AMPLIFIER)
+18V
0V
-18V
OUTPUT
+4/+6 dBm
(600Ω BALANCE)